TVS

TVS Jupiter 125

HAR 125cc SCOOTER SE ZYADA



SCAN ME

TVS Jupiter
ZYADA KA FAYDA

ZYADA CONNECTED

Built for riders who don't want to choose between staying connected and staying focused. Navigate, take calls, check alerts, all without reaching for your phone. The Jupiter 125 SXC keeps you connected to everything that matters, right from your handlebar.

TVS SMARTXONNECT

- TFT DIGITAL DISPLAY
- CALL & SOCIAL MEDIA ALERTS
- VOICE ASSIST
- TURN BY TURN NAVIGATION



ZYADA PERFORMANCE

Whether you're navigating a slope, sitting through a long signal, or just making your way through the morning rush, the Jupiter 125 SXC responds the way you need it to. The 125cc engine is refined, responsive, and designed to make every kind of ride feel unhurried.

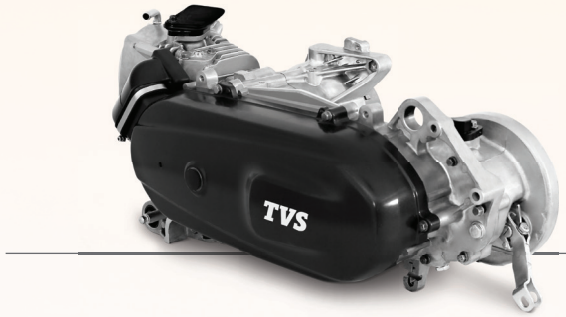

POWERFUL 125cc ENGINE

TVS iGO Assist

WITH MORE MILEAGE

NEXT-GEN STOP-GO TECHNOLOGY

MORE MILEAGE* AND MORE PICKUP

* Under TVSM internal test conditions.

INTEGRATED STARTER GENERATOR

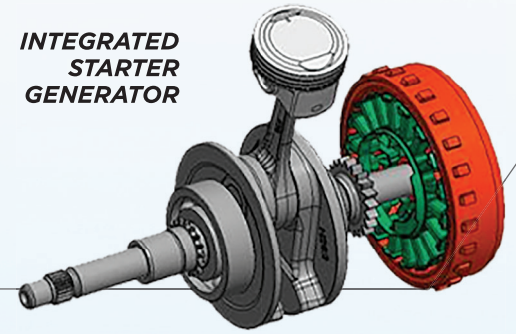

SILENT & RELIABLE START

AUTO START & STOP

ZYADA STYLE

The scooter you ride every day should feel like your choice, not just the default. The 125cc SXC variant is finished with attention to detail that makes it stand out, with premium colours, refined accents, and lighting that makes its presence felt.



SIGNATURE LED HEADLAMP



DIAMOND-CUT ALLOY WHEELS



CHROME HIGHLIGHTS



ZYADA SPACE

The Jupiter 125 SXC is designed around the reality of daily use, not just the idea of it. There's enough storage for everything you carry, a seat comfortable enough for whoever's riding with you, and thoughtful touches that make routine stops and errands easier.



LARGEST 33 L UNDERSEAT STORAGE



LARGE FRONT LEG SPACE

BODY BALANCE TECHNOLOGY



EXTERNAL FRONT FUEL FILL

ZYADA SAFETY

The Jupiter 125 SXC is built to inspire confidence from the moment you start it to the moment you park it. A tough all-metal body, responsive braking, and smart lighting work together to make sure every ride feels as secure as it feels smooth.

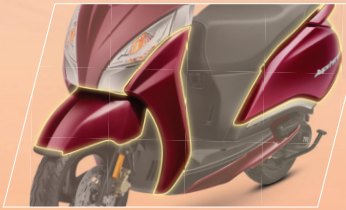

METAL MAXX BODY

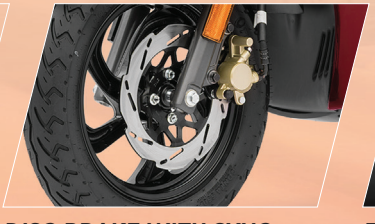

DISC BRAKE WITH SYNC BRAKING TECHNOLOGY

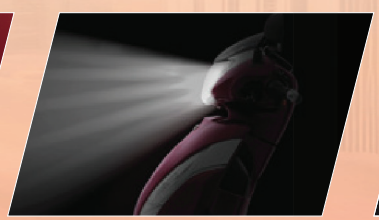

FOLLOW ME HEADLAMP



SIDE STAND INDICATOR & ENGINE INHIBITOR

ZYADA COLOURS

ELEGANT RED



MATTE COPPER BRONZE



ELITE GREEN



Product	Colour	iGO Assist	SmartXonnect	Alloy Wheels	Disc Brake	Metal Maxx
Drum Alloy		–	–	✓	–	✓
Disc		–	–	✓	✓	✓
DT SmartXonnect		✓	✓	✓	✓	✓
Disc SmartXonnect		✓	✓	✓	✓	✓
ABS SXC		✓	✓	✓	✓	✓

SPECIFICATIONS

ENGINE *(BS-VI OBDIIB compliant)*

Displacement	124.76
Engine Type	Single cylinder, 4-stroke, Air cooled
Bore x Stroke	Ø53.5 x 55.5 mm
Max. Power	6.3 kW @ 6500 rpm (with Assist) 6.0 kW @ 6500 rpm (without Assist)
Max. Torque	11.1 Nm @ 4500 rpm (with Assist) 10.5 Nm @ 4500 rpm (without Assist)
No. of Valves	2
Air Filter Type	Paper Filter
Transmission Type	CVT Automatic

DIMENSION

Vehicle Size	1852 x 691 x 1168 mm
Wheelbase	1275 mm
Ground Clearance	163 mm
Ground Reach	765 mm
Seat Length	790 mm
Front Leg Space	380 mm
Kerb Weight	108 kg

SUSPENSION

Suspension Front	Telescopic Hydraulic
Suspension Rear	Twin tube emulsion type shock absorber with 3-step adjustment

BRAKES & TYRES

Front Braking	220 mm disc
Rear Braking	130 mm drum
Tyre Size (Tubeless tyres)	90/90 - 12 - 54 J (Front & Rear)

ELECTRICALS

Battery	MF 12V, 5 Ah
Headlamp	LED
Taillamp	LED
Starting System	Electric Silent Start

CAPACITIES

Underseat Storage	33 litre
Glove Box in Front (Open type)	2 litre
Fuel Tank Capacity	5.1 litre

ALWAYS WEAR A HELMET WHILE RIDING.

www.tvsmotor.com/tvs-jupiter-125/disc I CALL: 1800 315 7775

10 YEAR WARRANTY+

+ 5-year warranty included.
Additional 5-year warranty can be purchased at ₹999.

TVS MOTOR COMPANY LIMITED
P. B. No. 4, Harita, Hosur - 635 109, Tamil Nadu, India.
Telephone: +**91 (4344) 276780** | Fax: +**91 (4344) 276878**