TVS

ET ECO TUNED FI

TVS Jupiter

OWNER'S MANUAL

BS-VI

ALWAYS USE TVS-M GENUINE PARTS

CONTACT(S) FOR SUPPORT	1
UNIQUE FEATURES OF TVS JUPITER	5
INTRODUCTION	8
UNIQUE FEATURES OF TVS JUPITER CLASSIC	9
ACCESSORIES	10
FOREWORD	11
NOTICE	12
SAFETY INFORMATION	13
RUNNING-IN INFORMATION	14
SAFE RIDING TIPS	15
KNOW YOUR TVS JUPITER	19
RIDING YOUR TVS JUPITER	38
MAINTENANCE	43
EXPRESS SERVICE	68
EXPERT ON WHEELS	69
PICKUP AND DROP	70
WARRANTY AND SERVICES	71
TECHNICAL SPECIFICATIONS	78
GENERAL INFORMATION	83

Incase you need any Clarification please contact

TVS Motor Company Authorised Main Dealer / Authorised Dealer

Or

TVS Motor Company's Area Offices (flip over for addresses)

Or

Toll Free Number : 1800-258-7111

Email : customercare@tvsmotor.com

Disclaimer : TVS Motor Company or any of its officials / Authorized Main dealer / Authorized Dealer do not ask customers for bank / card / wallet details / authentication. In case you face any such claim, please report to the relevant local authorities immediately.

CONTACT AT OUR AREA OFFICES

TAMILNADU-1, 3 & 4

1. **TVS Motor Company Limited**
   V Floor, Gee Gee Universal,
   No. 2, MC Nichols Road,
   Chetpet, Chennai - 600 031.
   Phone : 044-28361651/28361654
   Email : AO.Chennai@tvsmotor.com
   AO.Madurai@tvsmotor.com

TAMILNADU-2

2. **TVS Motor Company Limited**
   No. 10, 2nd floor,
   Shree Shanmugapriya Towers,
   Kannuswamy Street,
   Behind Hotel Annapoorna,
   R S Puram, Coimbatore - 641 002.
   Phone : 0422-4350060/2541035
   Email : AO.Coimbatore@tvsmotor.com

KERALA

3. **TVS Motor Company Limited**
   Ambady Towers, Second Floor,
   Door No. 27/631, A6,
   Edappally-Pookkattupady Road,
   Edappally PO., Cochin - 682 024.
   Phone : 0484-2544578/2556938
   Email : AO.Cochin@tvsmotor.com

KARNATAKA-1, 2 & GOA

4. **TVS Motor Company Limited**
   No. 600, Anand Surya, 2nd Floor,
   15th Cross, 6th Phase, JP Nagar,
   Opp. BMTC Bus Stop,
   Bangalore - 560 078.
   Phone : 080-26653433
   Email : AO.Bangalore@tvsmotor.com
   AO.Hubli@tvsmotor.com

ANDHRAPRADESH -1 & 2

5. **TVS Motor Company Limited**
   Rukumani Towers, First Floor,
   No. 3-11-30, Plot No. 11,
   Paigha Colony, Behind Anand Theater,
   Secunderabad - 500 003.
   Phone : 040-27840590/27844419
   Email : AO.Hyderabad@tvsmotor.com
   AO.Vijayawada@tvsmotor.com

MAHARASHTRA-1 & 2

6. **TVS Motor Company Limited**
   No. 401, 4th Floor, The Chambers,
   Plot No. 4/12/3, Near Ganapati Chowk,
   Viman Nagar, Pune - 411 014.
   Phone : 020-26632111/26632110
   Email : Service.pune@tvsmotor.com

MAHARASHTRA-3 & CHATTISGARH

7. **TVS Motor Company Limited**
   No. 502B, 6th Floor, B Wing,
   Shriram Shyam Towers,
   Near LIC Square, Sardar,
   Nagpur - 440 001.
   Phone : 0712-2569932
   Email : Service.Nagpur@tvsmotor.com
   AO.Raipur@tvsmotor.com

GUJARATH

8. **TVS Motor Company Limited**
   109, Ayna Complex,
   Opp. Suvarna Villa Bungalows,
   100 ft Thaltej Hebbatpur Road,
   Off : S.G. Highway, Thaltej,
   Ahmedabad - 380 054.
   Phone : 079-65443748
   Email : AO.Ahmedabad@tvsmotor.com

MADHYA PRADESH-1 & 2

9. TVS Motor Company Limited
No. 211-212, 2nd Floor,
Chinar Incube Business Centre,
Chinar Fortune City,
Near Brindhavan Dhaba,
Hosangabad Road,
Bhopal - 462 026.
Phone : 0755-2499406/2499306
Email : AO.Bhopal@tvsmotor.com
AO.Indore@tvsmotor.com

RAJASTHAN-1 & 2

10. TVS Motor Company Limited
Plot No. 17-18,
2nd Floor of National Motors Building,
Jhotwara Industrial Area,
Jaipur - 302 012.
Phone : 0141-5150901/5150902
Email : AO.Jaipur@tvsmotor.com
AO.Udaipur@tvsmotor.com

DELHI & HARYANA

11. TVS Motor Company Limited
D-3 & D-4, 2nd Floor,
Sector - 10, Noida,
Uttar Pradesh - 201 301.
Phone : 011-29834640/29834773
Email : AO.Delhi@tvsmotor.com
AO.Haryana@tvsmotor.com

PUNJAB & CHANDIGARH

12. TVS Motor Company Limited
4th Floor, Royal Business Park,
Chandigarh Ambala Highway,
Zirkapur - 140 603.
Phone : 01762-464777/465777
Email : AO.Chandigarh@tvsmotor.com

UTTAR PRADESH WEST

13. TVS Motor Company Limited
D-3 & D-4, 2nd Floor,
Sector - 10, Noida,
Uttar Pradesh - 201 301.
Phone : 011-29834640/29834773
Email : AO.Upw@tvsmotor.com

UTTAR PRADESH CENTRAL & EAST

14. TVS Motor Company Limited
1st Floor, Cyber Tower, TC-34/V-2,
Vibhuti Khand, Gomti Nagar,
Lucknow - 226 010.
Phone : 0522-4918300/4918301
Email : AO.Upe@tvsmotor.com
AO.Upc@tvsmotor.com

WEST BENGAL

15. TVS Motor Company Limited
Ground Floor & First Floor,
133 A. S. P. Mukherjee Road,
Opp. Tollygunge Police Station,
Kolkatta - 700 026.
Phone : 033-24617096/24617092
Email : AO.Kolkatta@tvsmotor.com

BIHAR

16. TVS Motor Company Limited
N-Plaza, Jamal Road,
P.S. Kotwali,
Patna - 800 001.
Phone : 0612-2200068/2200069
Email : AO.BNJ@tvsmotor.com

ORISSA & JHARKHAND

17. TVS Motor Company Limited

No. 303, 3rd Floor,
Creative Plaza, Rasulgarh,
Bhubaneshwar - 751 010.
Phone : 0674-2580019
Email : AO.Bhubaneshwar@tvsmotor.com

NORTH EAST STATES

18. TVS Motor Company Limited

147, Udayan, Ganesh Guri,
Opp. Punjab National Bank,
R G B. Road, Guwahati - 781 005.
Phone : 0361-2202030/2202031
Email : AO.Guwahati@tvsmotor.com

ECONOMETER®

Your scooter's speedometer has ECONOMETER® which indicates whether you are riding in Economy Mode or Power mode. This is unique feature of your scooter which guides you to ride your scooter fuel efficiently. Refer page No. 25 for details.

UNIQUE PASS-BY SWITCH (First Time in Scooters)

Pass-by Switch is a feature first time introduced in scooters ever. It allows you to easily switch between high & low beam of the head lamp with easy press and auto release. It is helpful especially while overtaking. Refer page No. 28 for details.

EXTERNAL FUEL FILL

No other Scooter offers you this unique facility. You can get petrol filled without even getting out of your seat.

RETRACTABLE BAG HOOKS

Your scooter has two retractable Bag Hooks to carry light luggage like carry bags weighing upto 3 kg.

One hook is located below the handle bar on the rear panel and the other one is located on the cover front below the front end of seat.

TUBELESS TYRES

Another important unique feature in your scooter is "Tubeless Tyres". Tubeless tyres reduce the chances of getting punctured. Even if there is a puncture, sudden leakage of air is avoided, thereby provide better safety and convenience. It is also very easy to repair the punctured tyres.

TELESCOPIC FRONT FORK

Your Scooter has Motorcycle-like 'Telescopic Front Suspension' for extreme comfort for excellent riding comfort even on bad roads.

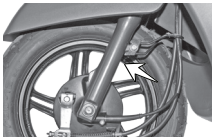

ADJUSTABLE REAR SHOCK ABSORBER

Your Scooter comes with Adjustable Shock Absorber, a first-in-the-industry feature. This allows you to adjust the required level of hardness / softness as per the usage requirement at just the push of a lever.

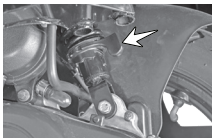

LED HEAD LAMP

Your Scooter comes in with a premium LED head lamp. Efficient and bright, this gives TVS Jupiter a totally upgraded Look and Style with better visibility for night rides.

LOW FUEL INDICATOR

'Low Fuel Indicator' is yet another unique feature of your scooter which indicates you to refill the fuel, when the fuel in the tank goes below minimum safe level. Refer page No. 26 for details.

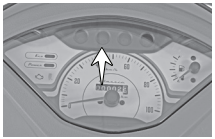

PATENTED E-Z CENTRE STAND

E-Z Centre Stand of your scooter reduces the effort required to place the scooter on stand. Refer page No. 31 for operating procedure.

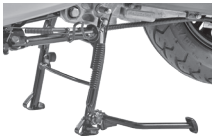

ALL BLACK LARGER ALLOY WHEELS

All 'Black Larger Alloy Wheels' with high mechanical advantage gives progressive braking of your scooter, results in best-in-class 'shortest distance' braking. It also provide superior comfort in bad road conditions.

PARKING BRAKE (REAR BRAKE LOCK)

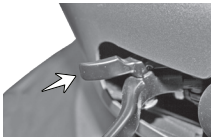

'Parking Brake' is another unique safety feature which protects your scooter from falling due to wheel rotation when it is parked with the side stand on a slope. Refer page No. 28 for details.

SYNCHRONISED BRAKE TECHNOLOGY (SBT)

Synchronised Brake Technology reduces the stopping distance, while keeping the stability intact.

UNDER-SEAT STORAGE (UTILITY BOX)

Your scooter has a 21 litre under-seat storage space to carry your luggage belongings, full face helmet etc., refer page No. 34 for details.

HELMET HOOKS

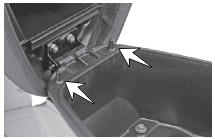

Your scooter has two helmet hooks under the seat assembly at the front end of utility box to secure your helmet. Refer page No. 35 for details.

SEAT-CUM-FUEL TANK CAP LOCK

Your scooter has a 'Dual lock' for opening the seat assembly and fuel tank cap. You can open the fuel tank cap without even getting down from the scooter, refer page No. 30 & 33 for operating procedure.

INTRODUCING THE EXTREMELY NEW TVS JUPITER CLASSIC

Some things transcend time, generations and retain their appeal. Evoking the same sense of timelessness and staying true to our philosophy of offering 'Zyada', we introduce the all new **TVS Jupiter Classic** edition. With its nostalgic design aesthetics, the **TVS Jupiter Classic** edition is an embodiment of style crafted just for you.

The new **TVS Jupiter Classic** edition comes loaded with a host of novel features such as the 'Classic-Edition' Decals, elegant Full Chrome Mirrors, Wind shield assembly, a classy Chrome Pillion Handle etc. Thoughtfully designed features like a Smart USB Charger and comfortable Dual Tone Seat ensures you have a great riding experience. All of this and many more to ensure you and your **TVS Jupiter Classic** always look a class apart. And as they say a classic never goes out of style.

BEIGE / SLIVER OAK PANELS

Exclusive beige / silver oak panels gives a unique personality to the scooter and exhibits a powerful signature of your stature.

CHROME PILLION HANDLE WITH CUSHION

The cushioned pillion handle lets the pillion rider relax and enjoy the ride. The sturdy chrome grabrail provides additional support and complements the premium-ness of the scooter.

DUAL COLOR SEAT

The dual colored seat stitched to perfection ensures not just a comfortable seating experience but lets you stay classy on the road.

WINDSHIELD ASSEMBLY & FULL CHROME ROUND MIRRORS

TVS Jupiter Classic edition's elegant windshield and full chrome mirrors give an exclusive styling to the scooter making it look a class apart.

CHROME DAMPER HANDLE BAR

Built to be stylish in every aspect, the chrome damper handle bars enhances yours and your scooter's style quotient.

CHROME SPECIAL STICKER ON FENDER

The all new front chrome on the fender adds a touch of sophistication giving the scooter a unique personality of its own.

ACCESSORIES FOR YOUR SCOOTER

SMART PHONE CHARGER*

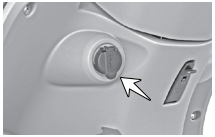

Smart phone charger is supplied as an optional accessory for your scooter. Location for fixing the socket is provided below the left side of the handle bar.

Contact nearest TVS Motor Company Authorised Main Dealer or Authorised Dealer for fixing the socket. Refer page No. 37 for usage details.

FRONT GLOVE BOX*

TVS Jupiter is provided with glove box front. Which has 1 litre storage capacity and used to hold your mobiles while charging or hold a small bottle.

INDICATOR BEEPER*

Your scooter has an electronic beeper which alerts you that the turn signal indicators are 'ON'. This beeper comes as a mandatory accessory.

** Mandatory and optional accessory will be charged extra*

Dear **Jupiter** Owner,

Thank you for choosing **TVS Jupiter**, a stylish scooter with an all-new CVT-i engine and many class-leading features. As the proud owner of a **TVS Jupiter**, you are now a part of the family of millions of satisfied TVS customers.

TVS Jupiter comes equipped with **ETFI (Eco Tuned Fuel Injection) BSVI technology**, giving you a smoother and enjoyable riding experience. With **TVS Jupiter**, riding comfort enters a new dimension. This innovative mobility embodies a combination of class-leading features and style unprecedented in the two-wheeler segment. Its unique vehicle design and superior ergonomics make it a scooter which gives you more in every aspect.

This manual explains the features and operations of your **TVS Jupiter**. Kindly read it carefully and follow the instructions to enjoy years of safe riding. To ensure reliable performance, we urge you to get your **TVS Jupiter** serviced only at TVS Motor Company Authorised Main Dealer / Authorised Dealer at specified regular periodic intervals.

We welcome you once more to a world of comfortable and easy riding!

TVS MOTOR COMPANY LIMITED

Take time to familiarize yourself with your TVS Jupiter and its performance characteristics.

This Owner's Manual contains a host of useful information. Please take the time to read this manual before you ride your new TVS Jupiter. Get familiarised with the operation of your scooter for maximum safety and pleasure. The better you know your vehicle, the more pleasure you will experience riding your new vehicle. Ensure that anyone else riding your TVS Jupiter does the same.

All information, illustrations, photographs and specifications contained in this owner's manual are based on the latest product information available at the time of this publication. TVS Motor Company Limited may, however, incorporate modifications or improvements on its vehicles at any time without notice, and therefore, in such events it is possible that the relevant part of the owner's manual does not apply to your vehicle.

Prior permission of TVS Motor Company Limited is required for quoting, copying or reproducing any part of this owner's manual.

Note

Accessories shown in the picture may not be part of the standard equipment.

Pictures shown in this manual are of TVS Jupiter Classic drum brake model unless specified.

Your scooter is provided with always glowing head lamp (AHO). The head lamp glows automatically once the engine is started.

Since your vehicle is fitted with side stand cut-off system ensure to retract the side stand before starting the vehicle.

Revision 7, Dec 2021

Operating this vehicle safely is an important responsibility of the rider. To help you make decisions on safety, we have provided necessary operating procedure and other information in this manual. This information alerts you on potential hazards that could hurt you or others. Since it is not possible to warn you about all the hazards associated with operating or maintaining the vehicle, you must use your own judgment.

You will find important safety information in following form in this manual. These words carry the following connotations:

⚠ Warning

Disregarding this message might result in ***injury to the rider or deadly accidents.***

⚠ Caution

This message indicates special procedures or precautions to be followed to ***avoid damage to the vehicle.***

ⓘ Note

This message provides further clarification for ***clear understanding of any particular information.***

The first 1000 km is a crucial part of your scooter. Proper running-in operation during this period helps in ensuring a **maximum life** and **smooth performance** of your scooter.

The reliability and performance of your scooter depends on the special care and restrain exercised during the running-in period. It is especially important that you avoid operating the engine in high speed (RPM), which could expose the engine parts to excessive stress. Recommended speed during the running-in is:

Maximum 50 km/h speed upto 1000 km (vary the engine speed for better mating of parts).

The first free service at 500 ~ 750 km is most important. During running-in period all the engine components and other parts will have set in. All adjustments to be restored, all fasteners to be tightened. **Engine cum transmission oil to be replaced**. Timely performance of the first free service will ensure optimum service life and performance from the engine.

Caution

Replacing the engine cum transmission oil during first service is most important for better life of engine. Always use TVS TRU4 SKUUTA (SAE 10W30 API-SL, JASO MB) oil for better performance and life.

SAFE RIDING RECOMMENDATIONS

Any two wheeler riding requires some precautions to be taken to ensure the safety of the rider, pillion rider and other road users. These precautions are:

Familiarise yourself with new TVS Jupiter

Riding skill and your mechanical knowledge form the foundation of safe riding practices. We suggest you to practice riding TVS Jupiter in a low-traffic condition until you are thoroughly familiar with your vehicle and its controls. Remember practice makes you perfect.

Riding apparel

Loose, fancy clothing can be uncomfortable and unsafe when riding a two-wheeler. Choose good quality two wheeler riding apparel.

Know your limits

Ride within the boundaries of your own skill at all times. Knowing these limits and staying within them will help you avoid accidents.

⚠ Warning

Two wheeler safety starts with wearing a good quality helmet*. One of the most serious injuries that can happen is a head injury. Always wear an ISI approved helmet that should fit your head comfortably and securely. You should also have good quality goggles to protect your eyes and help your vision.*

To prevent or minimize accident, never consume alcohol or drugs before or during the operation of your vehicle. Even minimal consumption of these will affect the rider's ability to control the vehicle.

Posture

Proper vehicle riding starts with proper posture.

1. Keep your elbows relaxed and flexible.
2. Sit and adjust yourself on seat so that arms and shoulders are relaxed.
3. Look widely instead of gazing at one point.

⚠ Warning

One-hand riding is dangerous. *Keep both hands firmly on the handle bar and both feet securely on the floor board. Under no circumstances should both the hands be removed from the handle bar, as it is very dangerous.*

Avoid use of mobile phones while riding as it could lead to fatal accident.

Slow down to a safe speed before negotiating a corner. If this is the first time that you are riding a vehicle of this type, we suggest that you practice on a safe, open area to become thoroughly familiar with the operation of the vehicle.

Cornering

When cornering, centrifugal force works in a direction perpendicular to the direction in which the vehicle is moving. Centrifugal force increases in proportion with speed and the radius of the corner.

During cornering, reduce speed so as to lessen the effects of centrifugal force. By all means, avoid abrupt application of brake or sudden steering.

Braking

For safe riding, it is very important to master the braking techniques.

1. Close / release the throttle.
2. Hold the vehicle upright as you apply the brake.
3. Progressive application of brake is safer.
4. **Apply both the brakes. 'SBT' provides additional braking even when 'Only Rear brake' is applied, But applying 'Both the brakes' helps you to use the full potential of the brakes.**
5. Riding down hills, while cornering and wet roads, close throttle and come to a slower speed to avoid the loss of control over the vehicle due to skidding.

Causes for poor braking

1. If the brake shoes / pads or drum / disc are worn out or if there is water or oil on them, sufficient friction does not develop and brakes do not work well.
2. Even when the brake works normally, if the road surface is wet or the tyre surface is worn-out, tyres do not take a firm hold on the surface, increasing the stopping distance.
3. Approximately 60% braking effect is from front brake. **Non-usage of front brake causes poor braking.**

⚠ Warning

As the vehicle speed increases, the stopping distance also increases progressively. Be sure that, you have sufficient distance between you and the vehicle or obstruction ahead of you.

Using only the front or rear brake is dangerous and can cause skidding and loss of control. ***Apply both the brakes together and with great care on a wet road or other slippery surfaces****. Any abrupt braking on slippery or irregular roads can cause loss of rider control.*

ACCESSORY INSTALLATION AND SAFETY TIPS

Use extreme caution while selecting and installing the accessories for your scooter.

The addition of **unsuitable accessories can lead to unsafe operating conditions.** Your friendly Dealer will assist you in selecting quality accessories and installing them correctly.

While selecting the accessories, make sure that the accessories **should not obstruct lighting, steering, suspension level and ground clearance.**

Additional electrical equipments is not acceptable as it will void warranty terms of the vehicle.

EMISSION CONTROL

All the TVS vehicles are tested in the factory for optimum fuel efficiency and CO levels. If the vehicle needs any adjustments, please consult nearest TVS Motor Company Authorised Main Dealer or Authorised Dealer.

While adequate care is exercised at the factory to ensure that the emissions are within the limits, it is essential for the owner to always maintain the scooter in good condition by getting it periodically checked and serviced by TVS Motor Company Authorised Main Dealer / Authorised Dealer so that the emission and fuel consumption levels are maintained as per norms.

Crankcase emission control system

The engine of new TVS Jupiter is equipped with a closed crankcase system to prevent discharging crankcase emissions into the atmosphere. Blow-by gas is returned to the combustion chamber through the air cleaner and the fuel system.

Evaporative Emission Control System

TVS Jupiter is equipped with an evaporative emission control system which consists of a canister and associated piping. This system prevents the escape of fuel vapors from the fuel tank.

⚠ Warning

If there is any abnormal jerk, startability issue are felt in the vehicle or noise due to sudden escape of gas during opening of fuel tank cap, immediately report to the TVS Motor Company Authorised Main Dealer / Authorised Dealer.

ⓘ Note

Your vehicle is tested and certified for emission which meets BS VI emission norms and is valid for initial 12 months from the date of purchase. Get your vehicle certified by the Government authorised emission testing station after initial 12 months of usage. And ensure to get the vehicle certified on expiry of the certificate obtained.

VEHICLE IDENTIFICATION NUMBER

The frame and engine serial numbers are the only means of identifying your vehicle from others of the same model and type. They are also required to assist your Dealer for ordering parts or referring to special information.

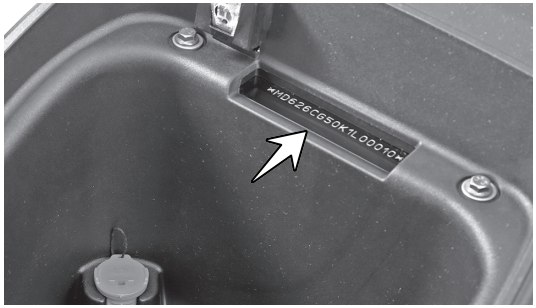

The frame serial number is stamped on the frame, at the rear end below the seat assembly. Open the seat assembly to read the frame number.

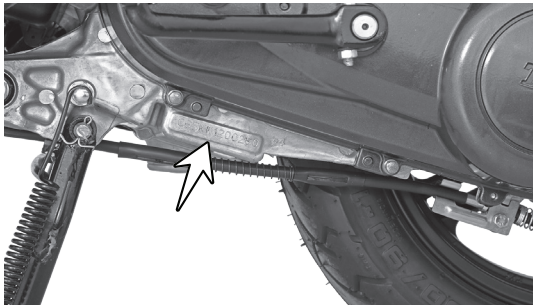

The engine serial number is stamped on the left side of the engine, at the bottom, near center stand mounting. See bottom to read serial number.

LOCATION OF PARTS - HANDLE BAR

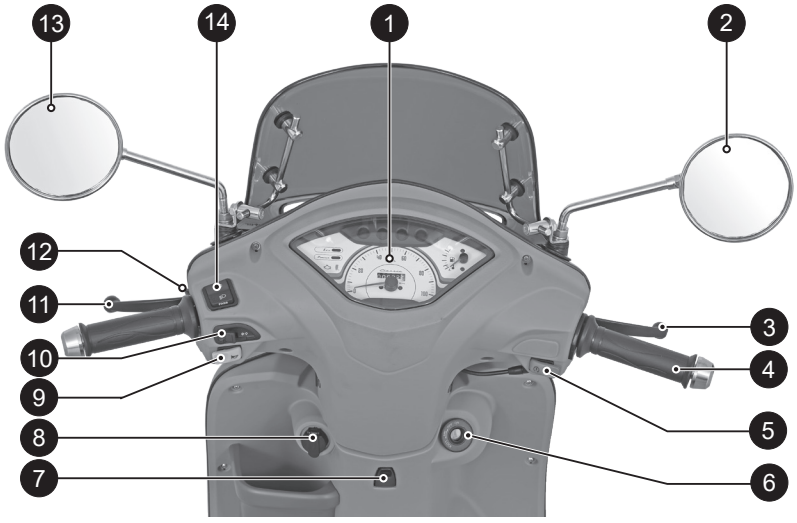

1. Speedometer assembly
2. Rear view mirror L
3. Right hand brake lever
4. Throttle grip
5. Electric starter switch
6. Ignition cum steering lock
7. Bag hook (front)
8. Smart phone charger*
9. Horn switch
10. Turn signal lamp switch
11. Left hand brake lever
12. Parking brake (rear brake lock)
13. Rear view mirror R
14. High / low beam cum pass-by switch

** Mandatory and optional accessory will be charged extra*

LOCATION OF PARTS - VEHICLE LEFT SIDE

1. Rear brake adjusting nut
2. Kickstarter lever
3. Effortless easy center stand
4. Side stand
5. Pillion foot rest L
6. Speedometer cable
7. Front brake adjusting nuts
8. Seat cum fuel tank cap lock
9. Pillion handle

LOCATION OF PARTS - VEHICLE RIGHT SIDE

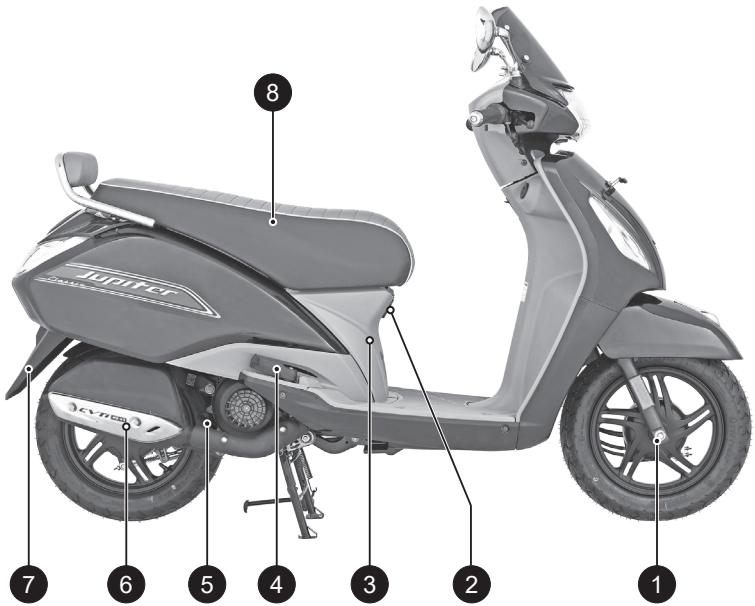

1. Front wheel axle nut
2. Bag hook (rear)
3. Cover front
4. Pillion foot rest R
5. Gauge oil level
6. Muffler assembly
7. Rear fender
8. Seat assembly

LOCATION OF PARTS - VEHICLE FRONT & REAR

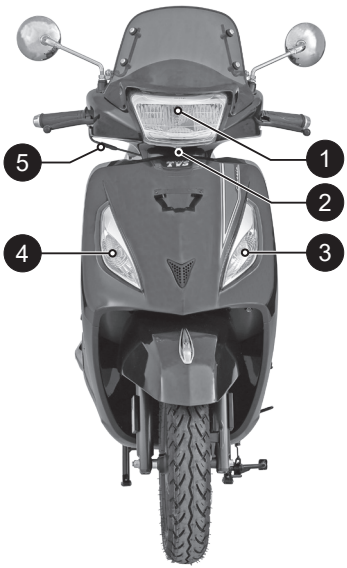

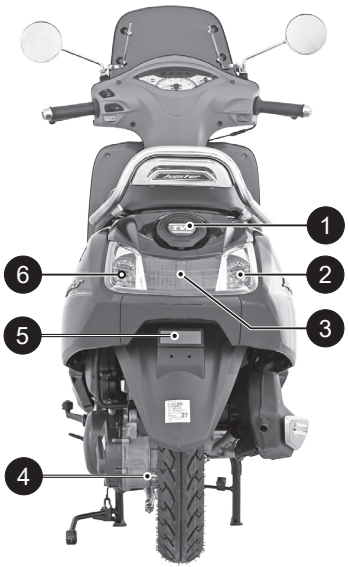

FRONT

1. LED Head lamp
2. Head lamp focus adjuster
3. Turn signal lamp front LH
4. Turn signal lamp front RH
5. Throttle cable adjuster

REAR

1. Fuel tank cap
2. Turn signal lamp rear RH
3. Tail / brake lamp
4. Transmission oil level screw
5. Reflex reflector
6. Turn signal lamp rear LH

** License plates are mandatory accessory will be charged extra*

CONTROL KEY

TVS Jupiter comes with a pair of identical control keys. These keys are to operate ignition cum steering lock, seat lock and fuel tank cap.

IGNITION CUM STEERING LOCK

The ignition switch enables and disables the electrical circuit and steering lock. The three positions of the switch are described below.

1. 'OFF' position

All the electrical circuits are turned 'OFF' in this position. Engine will not start. Key can be taken out.

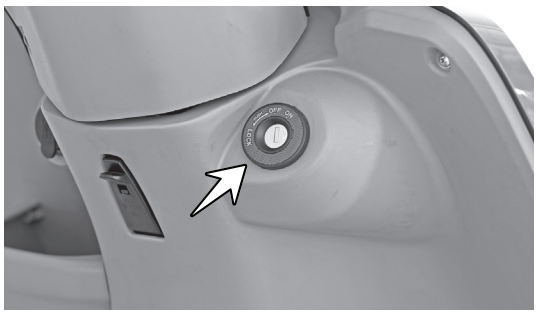

2. 'ON' position

In this position, all the electrical circuits are turned 'ON' and the engine can be started now. Key cannot be removed in this position.

3. 'LOCK' position

TVS Jupiter steering can be locked in both 'left' and 'right' directions.

Turn the handlebar to the 'left' or 'right'. Press the key IN and rotate it to the 'LOCK' position from 'OFF' position. All electrical circuits are deactivated and the steering is locked. Control key can be removed from the lock.

Insert the key into the lock and press the key IN and turn it to 'OFF' or 'ON' position to unlock the steering.

Note

When you switch on ignition key, the pump priming noise may be heard, which is normal. Avoid frequent SWITCH-OFF & ON of ignition key, to avoid unnecessary run of fuel pump.

The speedometer back illumination, tail lamp and license plate lamp glow automatically once the ignition key is turned 'ON' without activating any other switches.

Caution

Leaving the ignition cum steering lock in 'ON' position will drain the battery when the vehicle is not in use. "Switch Off" and take the key out when the vehicle is not in use. For safety always lock the steering.

Warning

Never attempt to move the vehicle when the steering is locked, you may lose balance.

SPEEDOMETER ASSEMBLY - NORMAL

1. Speedometer

Indicates vehicle speed in kilometers per hour.

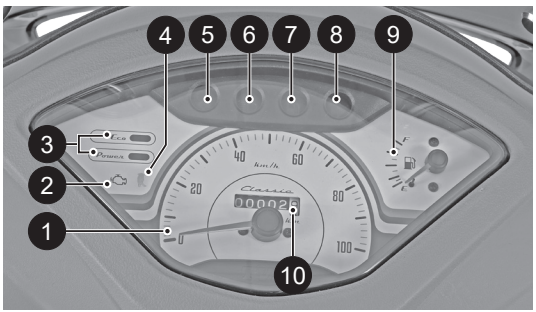

2. Malfunction indicator lamp - MIL ( )

MIL is turned ON when the ECU detects a fault in the system.

If the malfunction indicator lamp ' ' is glowing continually when the engine is started, immediately contact the nearest TVS Motor Company Authorised Main Dealer or Authorised Dealer.

3. Economy and power indicators

Eco indicator (green lamp) indicates that the vehicle is running in economy mode which gives better fuel economy.

Power indicator (amber lamp) indicates that the vehicle is running in power mode which results in reduced fuel economy.

Note

Always ride the vehicle in 'economy mode' for better fuel efficiency.

If the battery voltage is very low, power mode lamp will glow once you switch 'ON' the ignition key till you start the vehicle. Electric starter will not work in this condition. Use kick starter only. Contact TVS Motor Company Authorised Main Dealer or Authorised Dealer.

4. Side stand indicator ( )**

The side stand warning indicator turns 'ON' to alert you whenever the vehicle's side stand is deployed (vehicle parked condition) and continuous beep sound will be released from the vehicle to alert the rider to retract side stand before starting the vehicle.

Note

If the side stand is deployed the vehicle will not start. Retract the side stand to start the vehicle.

When there is a failure in the side stand sensor, in stand deployed condition the vehicle will not stop. As a safety measure it is recommended to visit the nearest TVS Motor Company Authorised Main Dealer / Authorised Dealer.

4. Turn signal indicator lamp left ( )

Flashes when the left side turn signal indication is activated.

5. High beam indicator lamp

Glows either when the head lamp high beam or the pass-by is activated.

***** Side stand indicator lamp will be applicable only for the vehicles produced after March 2022.***

6. Low fuel warning indicator lamp*

'Low Fuel Warning Indicator (LFI)' is a safety indicator to caution you to fill the petrol as soon as possible. Minimum 1.2 litre (approx.) petrol will be available in the tank when this indication comes 'ON'.

7. Turn signal indicator lamp right ( )

Flashes when the right side turn signal indication is activated.

8. Fuel gauge

Fuel gauge indicates the approximate quantity of fuel available in the fuel tank.

9. Odometer

Registers and displays the total distance covered by the vehicle in kilometers. The last digit denotes one tenth of a kilometer.

Caution

Minimum 1.2 liter of fuel should be maintained in the fuel tank to avoid engine switch OFF / damage to fuel pump which leads to replacement of pump without warranty.

**'LFI' is not a mileage calculating medium and it should not be used for measurement of fuel consumption*

LED HEAD LAMP

TVS Jupiter comes with a LED head lamp which glows automatically once the engine is started. The head lamp beam (high / low) can be controlled by pressing the 'high / low beam' switch.

HANDLE BAR LEFT SIDE

1. Horn switch

Press the switch ' ' to operate the horn.

2. Turn signal lamp switch

Slide the turn signal lamp switch to left ' ⇦ ' or right side ' ⇨ ' to operate respective turn signal lamps (LH / RH). Press the switch to turn 'OFF'.

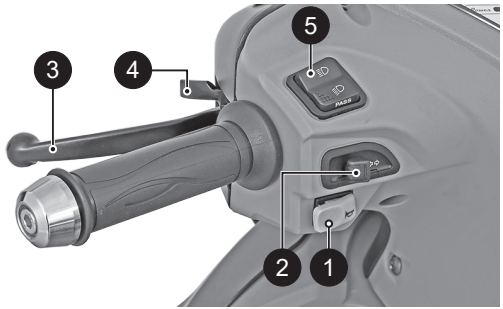

⚠ Warning

Always use the appropriate turn signal lamps when you intend to change lanes or take turns. Be sure to switch 'OFF' it after negotiating the lanes or turns.

3. Left hand brake lever (SBT brake lever)

Synchronised Braking Technology (SBT) can be operated by pressing the left hand brake lever gently towards the handle grip.

SBT technology helps to operate both front and rear brakes by distributing the force optimally between the two braking system.

4. Parking brake (rear brake lock lever)

Brake lock protects your scooter from rolling-off, when parked on side stand (or) helps you relax while waiting in a long traffic signal (or) a slope.

To activate brake lock, press the brake lever almost half towards the grip and hold, then press the parking brake lever to maximum and release the brake lever slowly. Ensure the brake is locked properly. Pressing the brake lever further releases the brake lock automatically.

⚠ Warning

Since your vehicle is fitted with SBT brake system it is essential to maintain the brake system in good condition. Adjust the brakes system at regular intervals for the proper working of SBT.

Ensure release the brake lock before riding the vehicle.

5. High/low beam cum pass-by switch

The head lamp glows automatically once the engine is started. Only the head lamp beam (high / low) can be controlled by pressing the 'high / low beam' switch.

Press the switch towards ' ≣D ' to operate head lamp high beam or press it towards ' ≣D ' to operate head lamp low beam.

TVS Jupiter has a combined switch for head lamp 'high / low beam' and 'pass-by'. To operate the pass-by, keep the switch in 'low beam' position, press gently and release. This makes the head lamp high beam to flash and signal the approaching vehicle. The pass-by signal can be used while overtaking during day time.

⚠ Warning

Use appropriate head lamp beam 'high / low' as per the traffic and road conditions for your safety and to avoid inconvenience to other riders. It is strongly recommended to ride the vehicle in 'low beam' during day.

HANDLE BAR RIGHT SIDE

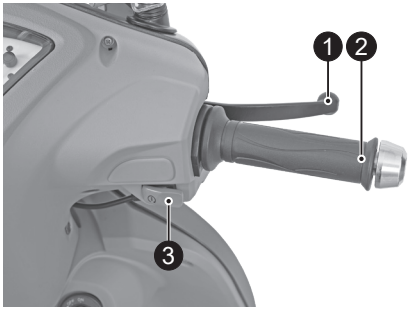

1. Right hand brake lever

Front brake system can be operated by pressing the right hand brake lever gently towards the throttle grip. The brake lamp glows on application of either right hand or left hand brake lever.

2. Throttle grip

Engine speed is controlled by the rotation of the throttle grip. Twist it towards you to increase the engine speed and twist it away from you or release it to decrease the engine speed.

3. Electric starter switch

Retract the side stand and press the starter switch '⟳' to start the engine electrically along with the application of either front or rear brake.

Caution

It is not recommended to add any additional throttle grip (cover).

Note

Before starting, ensure to turn 'ON' the engine kill switch and retract the side stand.

FUEL TANK* CAP

Fuel tank is located at the rear end of the vehicle below the pillion holder.

To open the fuel tank cap, insert the control key into the 'seat cum fuel tank cap lock' and turn it in anti-clockwise direction. The fuel tank cap opens automatically. To close the cap, gently press the cap in its position and ensure locking by hearing **'Click'** sound.

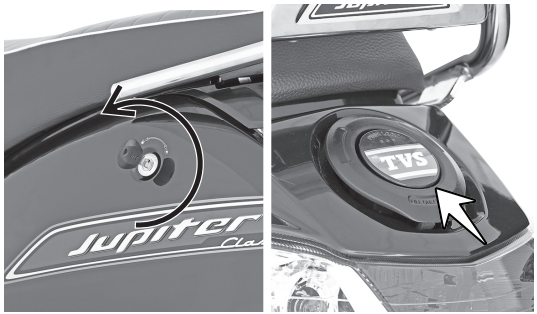

** The fuel tank is not a measuring instrument and the capacity of the fuel tank may slightly vary from the indicated capacity.*

⚠ Caution

Ensure that the fuel gun is inserted fully into the tank neck while refueling.

Whenever refueling, fill upto the bottom of the neck portion (insert level) of the fuel tank. Filling above the neck may result in improper breathing of fuel tank and seepage of fuel.

While refueling, avoid spillage of petrol on the tyre. If fuel spills on tyre, the tyre will loose its grip on the road. Ensure to close fuel tank cap without fail to avoid fuel spillage.

⚠ Warning

Never refill fuel near open flame. Do not smoke while refueling. Do not use cell phones while refueling.

KICKSTARTER LEVER

The kickstarter lever is located on the left side of the vehicle. To start the vehicle, keep the ignition in 'ON' condition and apply the rear brake as a safety precaution to prevent the rear wheel rotation.

Keep your foot on the lever extension as shown in the figure. Kick the lever from top and stroke to bottom with rapid motion.

EFFORTLESS E-Z CENTRE STAND

TVS Jupiter is equipped with a effortless centre stand. The centre stand (1) has a pivoted flexible spring loaded lever arm (stand extension) (2) to increase the lever ratio, which enables parking on centre stand effortlessly and very conveniently.

To place the vehicle on centre stand, hold the handle bar left grip with left hand. Place your foot firmly on the centre stand extension (2) and press.

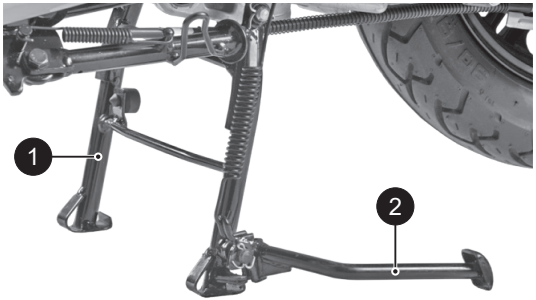

SIDE STAND

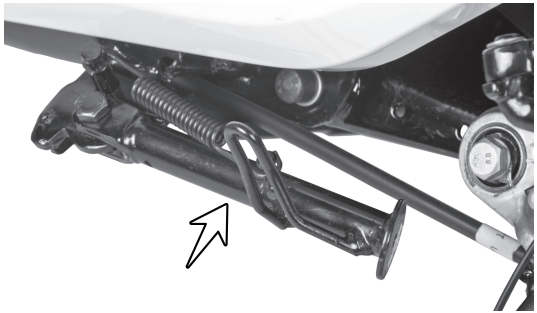

Side stand can be operated by sitting on vehicle with your left foot by pushing it away from the vehicle till it stops.

⚠ Warning

Always retract the side stand to its full up position before starting the vehicle. Else, the vehicle will not get start.

⚠ Caution

Never sit on vehicle when it is supported by stands. Always park the vehicle on a flat, firm surface.

TOOL KIT AND FIRST AID KIT

To assist you in performing certain aspects of periodic maintenance and emergency repairs, a tool kit is supplied along with the vehicle and it is located below the seat base. To access the tool kit, insert the control key into seat lock and rotate it in clockwise direction. Lift and open the seat.

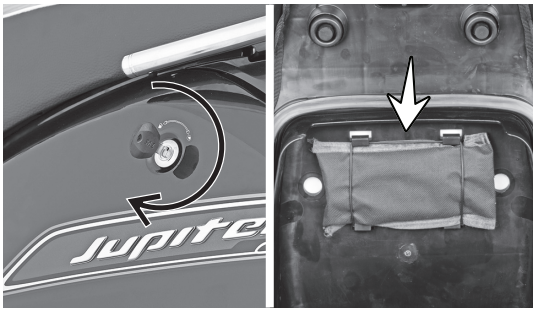

The tool kit consists one number each of the following. Ensure the contents of the tool kit.

1. 10x12 mm spanner
2. Combination screw driver bit
3. Screw driver handle
4. Tool bag

Caution

It is recommended to use the tool kit in case of any emergency only. It is always advisable to take your vehicle to TVS Motor Company Authorised Main Dealer / Authorised Dealer.

UTILITY BOX

Utility box is located below the seat. Lift the seat by unlocking the seat lock as explained earlier, to access the utility box.

⚠ Warning

Operating the TVS Jupiter overloaded will hamper the riding stability and may lead to loss of control. Hence, it is advisable to carry the recommended amount of load only.

⚠ Caution

Utility box can be used to carry a load of 10 kg maximum.

Do not carry perishable items inside the utility box. It is not fully sealed. Do not allow / spray water to get inside the utility box. Take care not to spill petrol or oil into the utility box.

Do not keep heat-sensitive items inside as it may get hot on long rides. ***Do not keep valuable items inside the utility box when leaving the vehicle unattended.***

GLOVE BOX FRONT*

TVS Jupiter is provided with glove box front. Which has 1 liter storage capacity and used to hold your mobiles while charging or hold a small bottle.

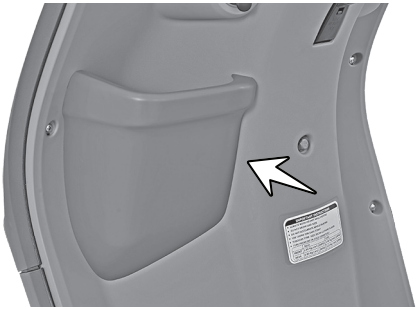

⚠ Warning

Ensure that your mobile or any material stored is safely held with in the glove box front while riding your TVS Jupiter.

HELMET HOOKS

Two helmet hooks are provided under the seat assembly at front end near the seat hinge to secure your helmet. Open the seat assembly (refer page No. 33) to access the helmet hooks. Hook the helmet strap in the helmet hook properly and close the seat assembly.

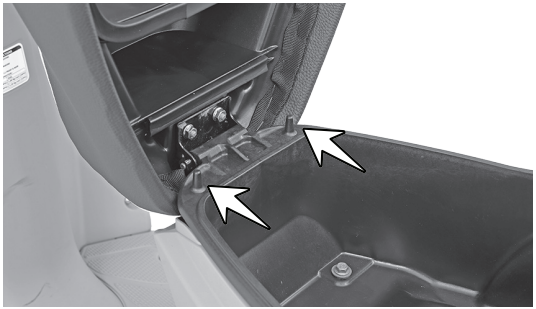

** Mandatory and optional accessory will be charged extra*

BAG HOOKS

There are two bag hooks provided with your scooter to carry light luggage like carry bags weighing upto 3 kg. One hook is located below handle bar on the rear panel.

Just pull out the hook from the top (A) to hang your luggage. Push back the hook once it is free.

Similarly, the other one is located on the cover front below front end of the seat assembly. Pull out the hook from its position. Open the top lid and hang your cargos. Lid will get close automatically. Push back the hook to its original position once it is free.

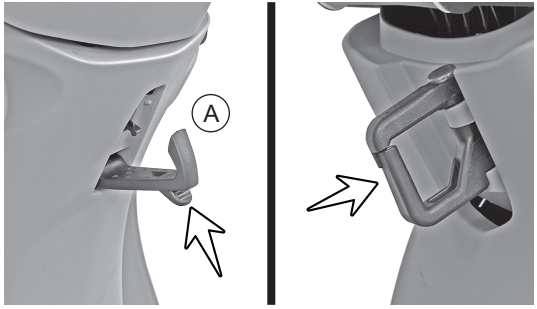

Caution

Care should be taken not to attach the luggage which hangs out of your scooter. Please note that the luggage attached to your scooter should not interfere your feet movement.

SMART PHONE CHARGER*

This smart phone charging socket enables you to charge your smart phone when you are traveling.

This socket is located below left side of handle bar. Please go through the operating manual of the mobile phone and use a suitable adaptor for the battery operation recommended by the mobile phone manufacturer for that particular model. Please follow the guidelines provided for the proper usage of the socket :-

DO's

1. Ensure that no water enters into the socket, by closing the USB flap properly.
2. Use only mobile phone company's authorized USB cable for mobile charging.
3. Do make sure the flap is not damaged while opening / inserting the USB cable.

DON'TS

1. Do not leave the USB charging flap open / partially closed.
2. Do not attempt to use / charge any other device, other than one mobile phone at a given time.

** Mandatory and optional accessory will be charged extra*

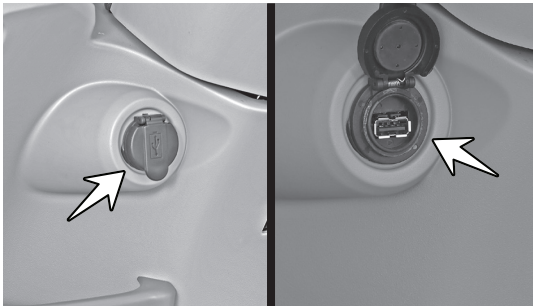

3. Do not try to force the USB connector in, check if it is inserted in the appropriate direction, to prevent damage.
4. Do not charge your mobile when the engine is in OFF condition.
5. Do not use other device, this port is for charging mobile phones only.

Caution

Secure your mobile phone properly during charging and protect it from any liquid, dust etc.

PRE RIDE INSPECTION

Check the following items before riding

ITEM	WHAT TO CHECK FOR
Engine oil	Availability of oil upto the level (page No. 54)
Transmission oil	Availability of oil upto the level (page No. 55)
Fuel	Enough fuel for the planned distance of running
Tyres	Correct pressure (page No. 61) Adequate tread depth / No cracks or cuts.
Battery	Proper working of electric starter, horn, fuel gauge, pass-by, brake lamp, tail lamp, speedoback illumination, license plate lamp and turn signal lamps.
Lighting	Proper working of head lamp high / low beam and high beam indicator
Steering	Smooth movement / No play or looseness
Throttle	Correct free play of cable / Smooth operation
Brakes	Correct front and rear brake lever play (page No. 56 & 59)
Wheels	Free rotation
Malfunction indicator	Turned OFF after the engine is started (page No. 25)

Caution

Do not switch 'ON' the ignition without minimum level fuel in tank. It will cause damage to the fuel pump.

STARTING THE ENGINE

Ensure availability of fuel in the fuel tank. Insert the control key into the ignition cum steering lock and turn it to the 'ON' position. In side stand retracted condition, apply any one of the brake and press the electric starter switch to start electrically or kick start.

Press the start button without applying the throttle. As soon as the engine starts, release the start button. The engine will not start if the throttle is opened full.

Setting the vehicle in motion

1. Twist the throttle grip slowly towards you and simultaneously release the brake lever gently and smoothly. The vehicle will start moving forward.
2. As the vehicle picks up speed, increase the throttle slowly.

⚠ Caution

Do not keep the engine in idling rpm for long and do not open excessive throttle when the vehicle is parked. It leads to overheating of engine and damage to the internal components.

⚠ Warning

Do not raise the throttle rapidly so the vehicle will move forward suddenly and lead to loss of control.

Stopping and parking

1. Close the throttle completely and apply both the brakes simultaneously.
2. Turn the ignition 'OFF'.
3. Park the vehicle on a firm, flat surface.
4. Lock the steering and take out the control key. Finally close the safety key shutter lock.

⚠ Warning

Reduce speed to a safe limit before turning / cornering. Do not apply brake while turning / cornering.

FUEL RECOMMENDATION

Use only BS VI petrol with minimum RON 91.

BS VI petrol containing upto 10% of ethanol by volume can be used.

Higher ethanol content in petrol can

- degrade plastic and rubber components of fuel system and vehicle parts
- cause corrosion damage to metal parts like fuel tank, etc
- result in startability & drivability issues
- decrease fuel economy

Ethanol absorbs water very easily, resulting fuel separation. Extra care shall be taken to prevent moisture entry into fuel tank while filling ethanol blended petrol and water washing of vehicle.

Painted parts (viz. panels, covers) shall not come in contact with ethanol blended fuels.

Manufacturer is not responsible for any warranty issues that results from using ethanol blend in excess of 10% by volume.

In case of any abnormalities observed due to use of ethanol blended fuels, customers are advised to use a different fuel station/brand for standard E10 fuel or contact authorised service centres.

Caution

Never mix oil in petrol in the fuel tank. Always fill fuel from the reputed and reliable fuel stations.

CHECKS AND TIPS FOR IMPROVING FUEL ECONOMY

Regular checks

Carry out the periodic maintenance checks as specified in this manual (page No. 44).

Regular maintenance checks will save fuel and ensure trouble-free, enjoyable and safe riding besides keeping environment clean.

Spark plug

A dirty or defective spark plug leads to wastage of fuel due to incomplete combustion. Clean and adjust the spark plug only if necessary. Replace the spark plug every 12000 kms (1 year). Always use recommended spark plug only.

Air cleaner element

A dirty air cleaner element restricts airflow and increases fuel consumption. Replace the element every 12000 kms.

Since paper filter is used in your scooter it is not recommended to clean the filter. Replace the filter incase of any abnormalities.

Engine oil and Transmission oil

Dirty or less engine oil increases friction between various parts of the engine and reduces the engine life, thereby increases the fuel consumption.

Running with low transmission oil will cause damage to the gears and bearings.

Regularly inspect the engine oil and the transmission oil for correct level and top-up if necessary. Get it replaced at regular intervals as per the maintenance schedule.

Fuel leak

Inspect and arrest fuel leaks if any from tank and fuel lines. Loss of fuel due to leak may drain the fuel tank completely.

Evaporation

Vehicle parked in the hot sun leads to wastage of fuel through evaporation. Also, lower fuel levels in the tank will have increased evaporation and condensation of moisture inside.

Ensure to close fuel tank cap after every filling. If the fuel tank cap kept open for long time, it leads to safety and fuel loss.

Tyres

Low tyre pressure has adverse effect on the vehicle. The **drag on the vehicle** increases resulting decreased fuel economy. Further more, handling may be adversely affected.

Inspect the tyre pressure regularly (weekly) and inflate it to the recommended pressure (refer page No. 61). Never use tyres which are worn beyond the permissible limit.

Wheel freeness

Inspect and ensure the wheel freeness by rotating the wheel at least once in a week to avoid wastage of fuel.

Avoid unnecessary idling

While waiting for someone or stopping in signals for long time, if the engine is kept running at idle speed, it causes unnecessary wastage of fuel.

Avoid frequent braking

Anticipate corners and slopes as well as the traffic conditions. **Unnecessary and frequent braking will reduce the fuel economy. Never accelerate and apply brake simultaneously.** It leads clutch shoes wear and wastage of fuel.

Note

The on-road mileage of TVS Jupiter is dependent on several factors like Road condition, Quality of fuel, Riding speed, operation of Clutch and Brake, Tyre inflation, Maintenance / timely servicing of vehicle, load etc. and hence will differ from the mileage given under standard test conditions such as made in recognised institutes.

MAINTENANCE SCHEDULE

The maintenance schedule indicates the intervals between periodic services. At the end of each interval, be sure to inspect, check, replace, adjust, lubricate and service as instructed. If the maintenance is not done periodically, it will result in rapid wear and severe damage to the vehicle. If the vehicle is used under high stress conditions such as continuous full throttle operation or if used / operated in dusty climate, certain jobs should be performed more often to ensure reliability of the vehicle. Cylinder head, steering components, suspension and wheel components etc., are key items and require very special and careful servicing. TVS Motor Company Limited strongly recommends that the jobs as per the maintenance schedule be performed by your TVS Motor Company Authorised Main Dealer / Authorised Dealer.

Periodic inspections may reveal one or more parts that may need replacement. Whenever replacing parts on TVS Jupiter, it is recommended that you use only the **TVS Motor Company Genuine** parts.

⚠ Caution

Proper running-in and maintenance are mandatory for making certain that your vehicle is reliable and gives optimum performance at all times. Make sure that the periodic maintenance is performed thoroughly in accordance with the instructions given in this owner's manual.

In more dusty areas, the air filter element required early replacement than the mentioned kilometers to avoid costly damages to the engine.

PERIODIC MAINTENANCE SCHEDULE (months or km whichever occurs earlier)

Item / Service / km / Period from the date of sale	In free service				After free service		Remarks
	1st 500 - 750 2 months	2nd 2500 - 3000 4 months	3rd 5000 - 6000 8 months	4th 8500 - 9000 12 months	Every 3000 km 4 months	Every 6000 km 8 months	
Engine oil	R	I &T	R	I &T	I &T	R	
Oil filter (strainer)	C	–	C	–	–	C	
Transmission oil	R	I &T	R	I &T	I &T	R	
Spark plug	I	–	–	–	–	–	Inspect, Clean and adjust if required, Replace every 12000 km
Air cleaner element	I	–	–	–	–	–	Replace every 12000 km
Air cleaner oil collection tubes	–	I & DR	I & DR	I & DR	I & DR	–	Drain oil if necessary
CVT filter element[1]	–	–	I & C	–	–	I & C	Replace every 12000 km
Tappet clearance	I	–	I & A	–	–	I & A	Inspect for any noise / starting trouble and adjust if required
Drive belt and CVT rollers	–	–	–	–	–	–	Replace every 24000 km
Cover variator[2]	–	–	I, C & L	–	–	I, C & L	
Clutch shoe	–	–	–	–	–	–	Replace every 24000 km
Hose fuel	–	–	–	–	–	–	Replace every 3 years
Front and rear suspension	I	I	I	I	I	–	Inspect for proper functioning

R - Replace; I - Inspect; T - Top up; C - Clean; A - Adjust; DR - Drain; L - Lubricate; TI - Tighten; S - Set

[1] Inspect for damage

[2] Clean the cover with air. Lubricate kick starter with Bechem grease

contd...

Item	In free service				After free service		Remarks
Service km Period from the date of sale	1st 500 - 750 2 months	2nd 2500 - 3000 4 months	3rd 5000 - 6000 8 months	4th 8500 - 9000 12 months	Every 3000 km 4 months	Every 6000 km 8 months	
All control cables[3]	I, A & L	I, A & L	I, A & L	I, A & L	I, A & L	–	
Throttle grip	–	–	L	–	–	L	Lubricate using grease
Steering smooth operation / play	I & A	–	–	–	–	–	C, L & A with fresh grease every 12000 km
Speedo hub drive / cable	–	–	L	–	–	L	Lubricate using grease
Front fork oil	–	–	–	–	–	–	Replace every 24000 km
All fasteners	I & TI	I & TI	I & TI	I & TI	I & TI	–	
All bulbs, horn and switches	I	I	I	I	I	–	Inspect for proper functioning
Head lamp beam	I & A	I & A	I & A	I & A	I & A	–	
Battery voltage[4]	I	I	I	I	I	–	
Brake effectiveness / play	I & A	I & A	I & A	I & A	I & A	–	Refer page No. 58 & 61 for details
Brake shoe wear	I	I	I	I	I	–	Replace if necessary
Wheel freeness	I	I	I	I	I	–	
Front wheel bearing	–	–	–	–	–	–	Lubricate using grease every 12000 km

R - Replace; I - Inspect; T - Top up; C - Clean; A - Adjust; DR - Drain; L - Lubricate; TI - Tighten; S - Set

[3] Inspect for proper operation and adjust play. Lubricate ends using grease

[4] Recharge if necessary

contd...

Item	In free service				After free service		Remarks
Service km Period from the date of sale	1st 500 - 750 2 months	2nd 2500 - 3000 4 months	3rd 5000 - 6000 8 months	4th 8500 - 9000 12 months	Every 3000 km 4 months	Every 6000 km 8 months	
Tyre pressure at cold condition	I & S	I & S	I & S	I & S	I & S	–	
Malfunction indicator lamp	I	I	I	I	I	–	*Check and resolve the errors using diagnostic tool if the lamp is ON even after starting the engine*
Evaporative emission control system	I	I	I	I	I	–	Check for intactness of hoses and canister
Fuel tank assembly**	I & C	I & C	I & C	I & C	I & C	–	
Centre / side stand pivot	L	L	L	L	L	–	Lubricate using TRU4 oil
Kick starter pedal pivot	L	L	L	L	L	–	Lubricate using TRU4 oil

R - Replace; I - Inspect; T - Top up; C - Clean; A - Adjust; DR - Drain; L - Lubricate; TI - Tighten; S - Set

*** Check for abnormal vehicle jerk / noise while opening the cap / leak. If found any, contact TVS Motor Company Authorised Main Dealer or Authorised Dealer.*

RECOMMENDED LUBRICANTS

APPLICATION	QTY	MANUFACTURER	BRAND
Engine oil	750 ~ 800 ml (during regular service) 800 ml (incase of disassembly)	TVS Motor Company	TVS TRU4 SKUUTA oil (SAE 10W30 API-SL, JASO MB)
Transmission oil	100 ml (during regular service) 120 ml (incase of disassembly)	-do-	-do-
Front fork oil	84 ± 1 ml / leg	IOC	Gabriel Premium front fork oil
Grease	– –	Bharat petroleum IOC Bechem Kluber Lubrication	MP Grease No. 3 Servo Gem No. 3 Bechem premium grade 3 Kluber Centoplex 2

SELF - MAINTENANCE PROCEDURES

MAINTENANCE FREE (MF) Battery

Battery is located at the front of vehicle inside the front panel. This panel must be removed to access the battery.

1. Follow the procedure for front panel removal:
2. Remove the front panel mounting screws (4 Nos.).
3. Remove the license plate front mounting screws (A) (2 Nos.) and take out the license plate front.
4. Remove the bracket license plate mounting hexagonal bolts (B) (2 Nos.) and take out the bracket license plate.

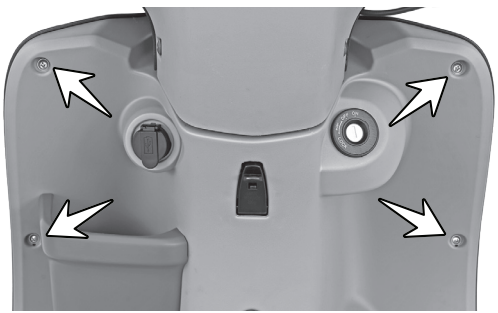

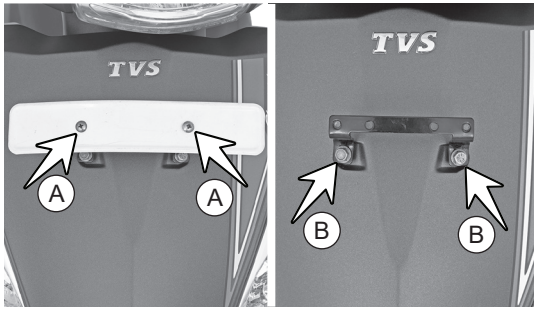

5. Gently pull out the front plane by dislocating its lugs.
6. During reassembly reverse the dismantling procedure.

Since the maintenance free battery is fitted in your vehicle it is not necessary to top-up with the distilled water. But to ensure the battery performance and long life, follow the steps given below:

Check the battery voltage as per the schedule. If the voltage is less than 12.4 volts, charge the battery using **recommended MF battery charger** at TVS Motor Company Authorised Main Dealer / Authorised Dealer.

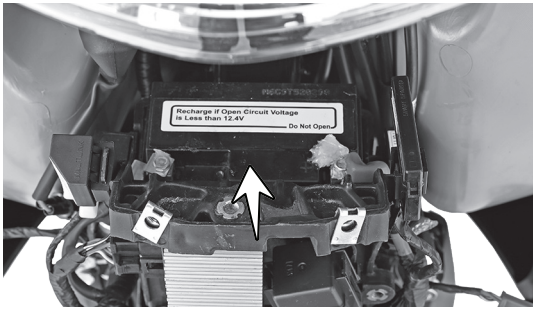

Do not add any additional electrical accessories.

While connecting the terminals, observe the correct polarity. Connect the red wire to the '+' terminal and black wire to the '-' terminal of the battery.

Petroleum jelly must be applied at terminals to prevent it from corrosion.

Incase of any abnormality or for removal of battery from the vehicle, contact TVS Motor Company Authorised Main Dealer / Authorised Dealer.

Caution

Never check the battery charge by shorting the terminals. Always connect the positive terminal first (red wire) and then negative (black wire) to avoid sparking.

The inversion of the battery wires can damage the battery and the recharging system. Always connect the positive then negative to avoid sparking.

Recommendations to maintain battery health during prolonged parking conditions

While your vehicle is parked for prolonged duration, battery continues to discharge and if left unattended can get completely discharged. It is recommended to ride the vehicle for minimum 60 km every week to keep the battery in healthy condition This could be at a stretch in one ride or several rides during the week.

The vehicle speed will vary during the ride but an average speed of minimum 30 kmph will be helpful to ensure proper battery charging. Use kick-starting, if available, to conserve battery charge during such period. This is only a recommendation to maintain battery charge and regular service schedules must be followed to maintain your vehicle in good running condition.

The following is recommendations to users regarding battery maintenance before, during and after long storage of battery:

1. Before Storage

a. Store the battery only after fully charging it

b. Battery fuse to be disconnected and stored safely. This will reduce the sleep mode current and hence enhance storage life of battery.*

c. Alternatively, battery connecting wires (positive and negative wires) can be disconnected and fasteners can be secured with battery terminals.*

2. During Storage

a. Store it at room temperature or lower.

b. Store the vehicle in the shade and protected from rain and cover the vehicle to prevent rodents from entering and damaging the wires.

3. After Storage

a. Connect the wires and fuse, if disconnected earlier, with ignition switch in OFF position*

b. Start the vehicle by kick starting.

(Above recommendations do not consider storage effects on other systems such as induction and fuel systems and wheels)

* *To be done by skilled personnel*

Periodic Maintenance of Batteries:

- Keep top of battery clean.
- Check cables, clamps, and case for obvious damage or loose connections.
- Clean terminals and connectors as necessary.
- Recharge battery if voltage is below 12.4V.
- Valve Regulate Lead Acid (VRLA) / Lead Acid batteries are prone to water damage. Any water entry, through vents or otherwise; will result in irreparable damage to the battery or the vehicle.

⚠ Warning

Battery develop explosive gases. Keep it away from heat sources. If charging is required the battery must be charged in well ventilated area.

Unusable battery must be disposed in environment friendly manner. Do not discard it with household thrash. Handover the battery to the battery dealers or to a recycle center that accept used battery.

⚠ Caution

Never operate the vehicle with discharged battery as it may damage electrical components.

Do not push start the vehicle, use a good battery to start the vehicle.

FUSE

Non-working of electrical systems may be due to safety fuse failure. Short circuit or overload in the electrical system are the main causes for fuse failure. There are two fuse cases containing three blade type fuses (15A x 1 and 10A x 2) located near the battery. Follow the procedure given below for inspecting and replacing the fuse.

1. Turn 'OFF' the ignition.
2. Remove the front panel as explained earlier.
3. Take out the fuse cases one by one near from the battery.
4. Open the fuse cases and take out the fuses.

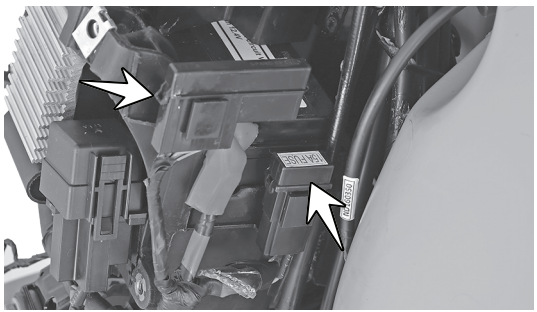

5. Inspect the fuse for failure. If found defective, replace the fuse with a new (extra fuse provided in the wiring harness itself in a pouch or provided inside the fuse case itself).
6. Close the fuse case and re-fix it into the battery box.
7. Turn 'ON' the ignition switch and check for proper functioning of electrical systems. Incase the fuse fails again, consult the nearest TVS Motor Company Authorised Main Dealer / Authorised Dealer.

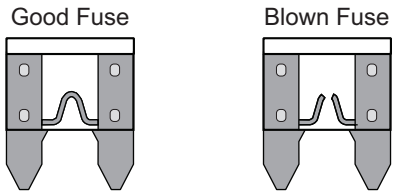

Caution

Do not use vehicle by ***shorting the wires without fuse.*** *This may result in overheating of electrical items / wiring and may result in fire. Do not use fuse of higher amperage than specified for the safety of electrical system.*

SPARK PLUG

To access the spark plug, the cover front has to be removed. Follow the procedure to remove the cover front.

1. Open the seat and remove the top mounting screws (A) from both the sides of cover front.
2. Remove the bottom mounting bolt (B) of cover front.
3. Gently pull out the cover front by dislocating its lugs.
4. Clean the dust and mud around the spark plug mounting to avoid falling inside the cylinder.

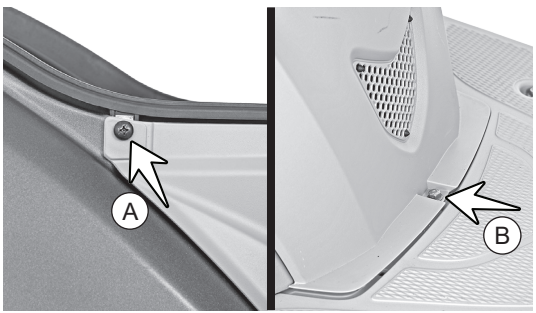

5. Pull out the suppressor cap from spark plug. Using the spark plug spanner, remove the spark plug.

A spark plug with heavy carbon deposits will not produce strong sparks. Hence, only if necessary, clean the carbon deposits from the spark plug with a small wire brush or spark plug cleaning tool.

Inspect the spark plug electrodes (A) and (B) for any corrosion. If found any replace the spark plug with new. Inspect the spark plug gap with a wire gauge / feeler gauge. Readjust the spark plug gap to **1.0 ~ 1.1 mm** if required.

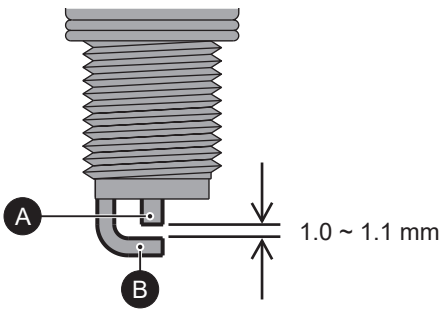

After cleaning and adjusting the gap, reinstall the spark plug and tighten by hand to avoid cross threading. Finally tighten using spark plug spanner.

Caution

Always use only recommended make and type of spark plug. ***Replace spark plug every 12000 km.***

Don't remove the spark plug when the engine is hot. Cover the spark plug hole with cloth when the plug is removed, to prevent dust / water entry.

It is advisable to tighten the new spark plug by hand till the end, using plug spanner tighten by 1/4 turn. Then loosen the plug by 1/8 turn and re-tighten using plug spanner.

ENGINE OIL LEVEL

Check the engine oil level periodically.

1. Place the vehicle on centre stand on a flat surface. Wipe-off the surroundings of gauge oil level.
2. Remove the gauge and wipe it clean.
3. Fix the gauge back to its mounting hole. Do not thread in.
4. Take out the gauge and check the oil level. The level should be between minimum and maximum level marks of the gauge (shown in the figure).
5. If the oil is less than the minimum level, add 'TVS TRU4 SKUUTA (SAE 10W30 API-SL, JASO MB)' oil upto the maximum level mark.

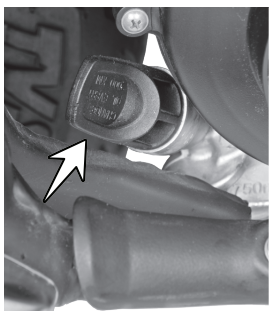

6. Wipe out the oil traces with a clean cloth to prevent dust accumulation.
7. Assemble back the gauge oil level.

TRANSMISSION OIL - LEVEL

Check the transmission oil level periodically.

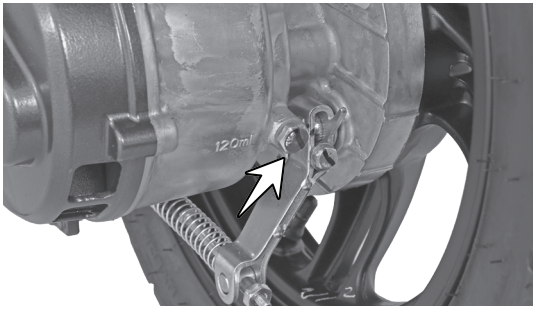

Caution

If the vehicle is driven with less engine and transmission oil, the engine components will be severely damaged.

Check the oil level as per the schedule to avoid costly damage. Do not fill excess oil may cause oil leak. Always use 'TVS TRU4 SKUUTA (SAE 10W30 API-SL, JASO MB)' oil only.

1. Place the vehicle on centre stand on a flat surface.
2. Wipe-off the surroundings of oil level screw.
3. Remove the transmission oil level screw along with a gasket from the rear end of crankcase L.
4. Check for the flow of oil from oil level hole.
5. If the level is less (if there is no oil flow), top-up with 'TVS TRU4 SKUUTA (SAE 10W30 API-SL, JASO MB)' oil till the oil just starts to flow out from the oil level hole.
6. Wipe out the oil traces with a clean cloth to prevent dust accumulation.
7. Replace the fiber washer while reassembling the oil level screw.

BRAKES

Front brake - SBT type

1. Measure the free play of the front brake lever at lever end as shown in the figure.
2. The free play of the brake lever before the engagement of brake should be between 15 ~ 20 mm.
3. Turn the adjuster nut at the bottom side (1) in the slot marked as "I" in clockwise direction for reducing the free play or in anti-clockwise direction for increasing the free play.

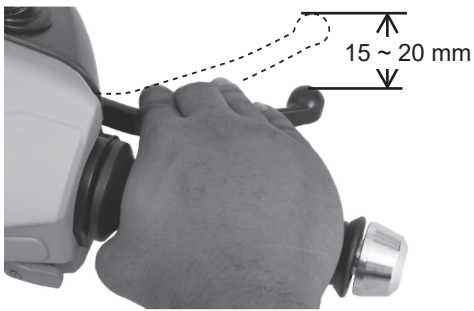

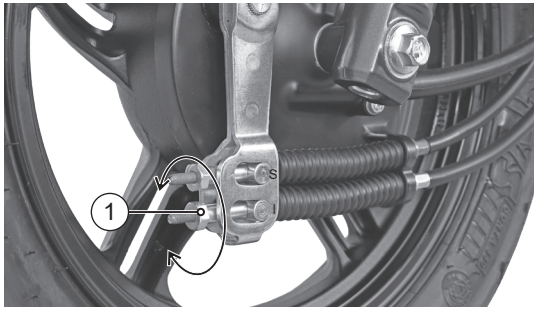

4. After obtaining the necessary free play, inspect for the clearance between the bullet (3) and slot end (4) marked as "S" as shown in the figure.

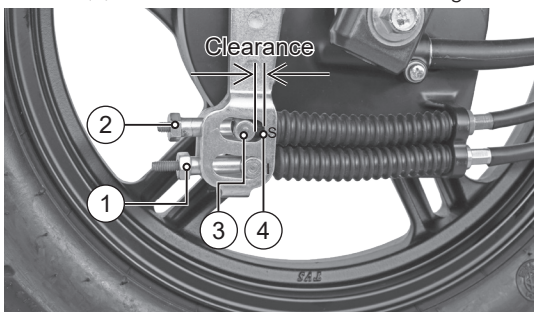

5. If any clearance is found, turn the adjuster nut (2) at the top side in the slot marked as "S" in clockwise direction until there is no clearance between the bullet top (3) and the slot top (4).

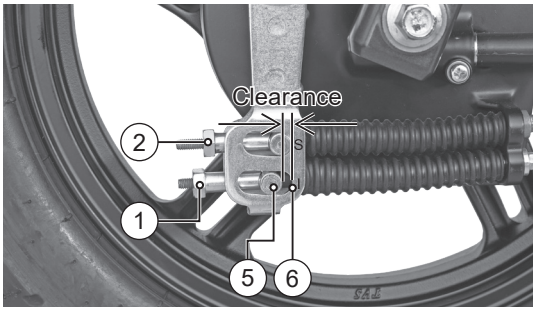

6. After adjusting the adjuster nut top, If any clearance is observed in between the bullet bottom (5) and the slot bottom (6) marked as "I" as shown, then turn the adjuster nut (2) in anti-clockwise until there is no clearance.
7. Once again check and confirm the brake play at the lever end.

⚠ Warning

Since the vehicle is fitted with Synchronised Braking Technology (SBT) adjust the brakes with additional care. If not it may result in brakes not working properly*. Please contact TVS Motor Company Authorised Main Dealer or Authorised Dealer for any further assistance.*

Brake shoe wear indicator - Front

When the brake is applied, wear limit index mark (1) on the front brake cam should be within the wear limit indicator (2) on the front brake panel.

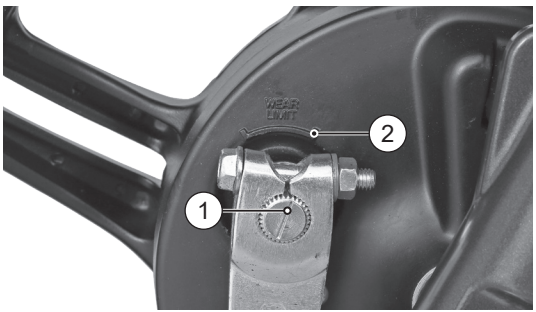

Incase the wear limit index mark (1) is going beyond wear limit indicator (2), index the lever to next slot with the help of the Dealer to extend the shoe life.

Caution

Replace the brake shoes as a set, if the wear limit indicator shows beyond the wear limit even after indexing the lever.

Rear brake

1. Measure the free play of the rear brake lever at the lever end as shown in the figure.
2. Free play of brake lever before the engagement of brake should be between 10 ~ 15 mm.

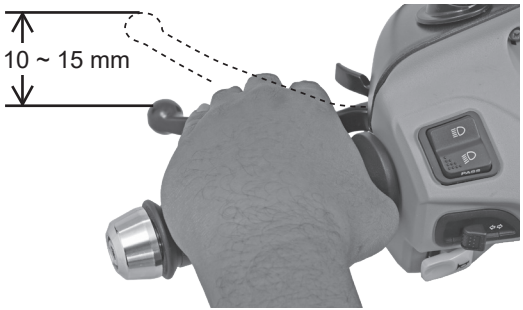

Note

Please remember that the rear brake lever free play adjustment to be done only after adjusting the front brake lever play.

3. If the measured distance is more than the limit, adjust the nut provided at the rear wheel end to obtain the correct play.
4. Turn the adjuster nut in clockwise direction for reducing free play or in anti-clockwise direction for increasing the free play.

Warning

Check front brake (drum brake type) and rear brake play periodically. However the brake play needs to be adjusted more frequently depending upon the usage.

Brake shoe wear indicator - Rear

When brake is applied, the wear limit indication pointer (1) on the rear brake cam lever should be within the wear limit indicator (2) on the crankcase LH.

In case the wear limit indication pointer (1) is going beyond wear limit indicator (2), index the lever to next slot with the help of Dealers to extend shoe life.

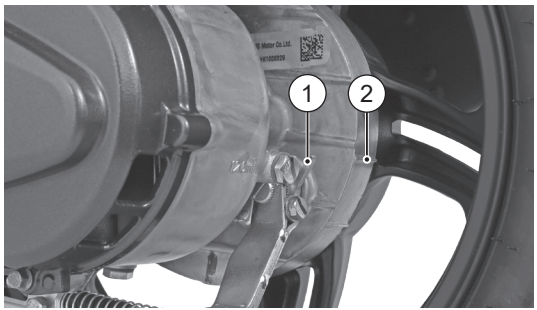

Caution

Replace the brake shoes as a set, if the wear limit indicator shows beyond the wear limit even after indexing the lever.

REAR SHOCK ABSORBERS

TVS Jupiter is provided with 3 step adjustable rear shock absorbers to meet different road and load. There are 3 notches for adjusting spring load.

If the spring is adjusted to the minimum notch, then the shock absorber will be softer which is good for light loads. If the spring is adjusted to maximum notch, then it will be stiffer which is good for heavy loads.

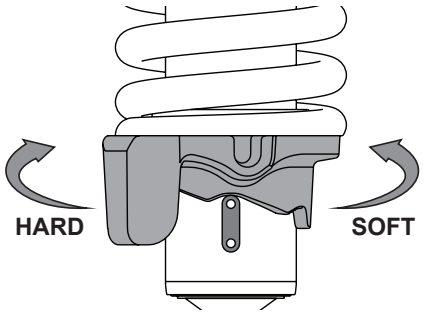

Adjust the spring pre-load by shifting the adjuster to the required notch according to the different load conditions. The more you compress the spring, the suspension becomes more stiff.

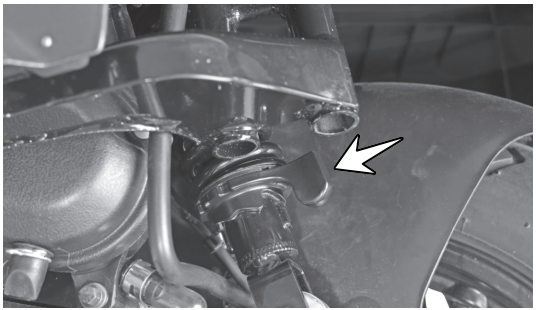

TYRES

Tyre pressure

Check the tyre pressure atleast once in a week if not more frequently. Insufficient air pressure in the tyres not only hasten the tyre wear, but also seriously affects the stability of the vehicle.

Under inflated tyres make smooth cornering difficult and over inflated tyres decreases the tyre contact with the ground which can lead to skidding and loss of control.

Be sure that the tyre pressure is within the specified limit at all times.

Tyre pressure in cold condition:

	Solo	**Dual**
Front	1.70 kg/cm² (24 PSI)	1.70 kg/cm² (24 PSI)
Rear	2.00 kg/cm² (28 PSI)	2.25 kg/cm² (32 PSI)

Tyre tread condition

Operating the vehicle with excessively worn tyres will decrease riding stability and can lead to loss of control. It is recommended to replace the tyre when the tyre wears off to the tyre wear indicator level (indicated by TWI (A) on the tyre).

⚠ Warning

The tyre inflation pressure in cold condition and the tyre tread condition are extremely important for the performance and safety of the rider. Check the tyres frequently for inflation pressure as well as the wear pattern on it. Use of a tyre other than the standard may cause instability.

Tyre rotation direction

While reassembling the tyres, after removing from the wheel rim, ensure that the arrow mark facing the direction of wheel rotation while fixing the tyre on the wheel rim.

Tyre puncture

Your scooter is fitted with a tubeless tyre on both front and rear wheel. Incase of any puncture / tyre damage, it is advised to visit the nearest tyre manufacturer Dealer or the tyre repair shops who knows the repairing method of tubeless tyre.

It is not necessary to remove the tyre from wheel rim always to attend a puncture. Even though, if there is need of tyre removal, it is strongly recommended to use a tyre removal / fitment machine.

If at all, tyre levers needs to be used, the levers should be free from sharp edges. Care should be taken not to damage the tyres and rims.

⚠ Caution

The side walls of the tubeless tyre which in contact with the wheel rim are only seals the air inside the wheel assembly. Hence care should be taken not to damage the side walls of the tyres during removal / reassembly.

Inflation Pressure Check - Condition

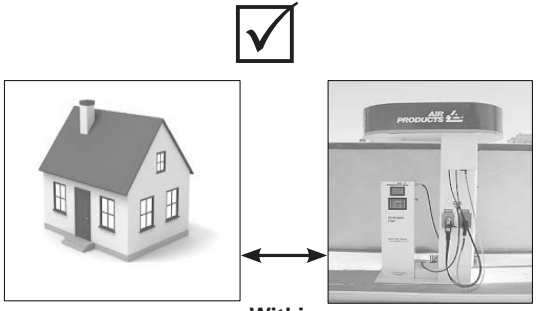

Within 1 km

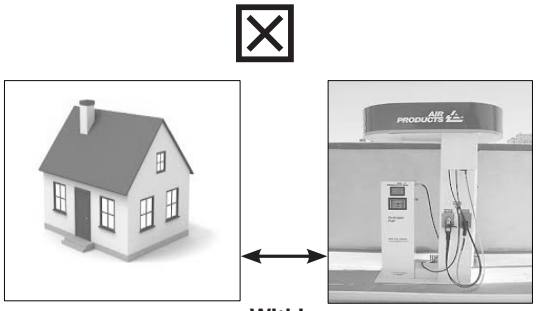

Within 5 km

Note

If vehicle is in hold condition for long time

- Need movement of vehicle to avoid particular spot of tyre not to touch the ground for more than week time.
- Inflation pressure should check on cold condition maximum travel time should not exceed more than 1 km.
- Weekly basis inflation pressure check helps to improve 10% of tread life & fuel efficiency.

FRONT WHEEL REMOVAL AND REASSEMBLY

1. Remove the axle nut (1) along with a washer.
2. Pull out the axle (2) along with a washer and take out a spacer from the left side of the wheel.
3. Place a support below the foot board to prevent the vehicle from falling and lift the vehicle up.
4. Dislocate the wheel assembly along with brake the panel from front fork. Separate the brake panel from the wheel and take out the wheel.
5. Reverse the procedure for reassembling. While reassembling ensure to locate the lug on fork leg L to the slot in the brake panel.

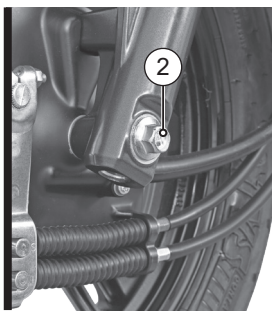

REAR WHEEL REMOVAL AND REASSEMBLY

1. Place the vehicle on the centre stand.
2. Hold the rear brake firmly and remove the wheel mounting nut (A) along with a washer.
3. Slightly tilt the vehicle and take out the wheel from the rear axle.
4. Reassemble the wheel in the reverse order of removal.

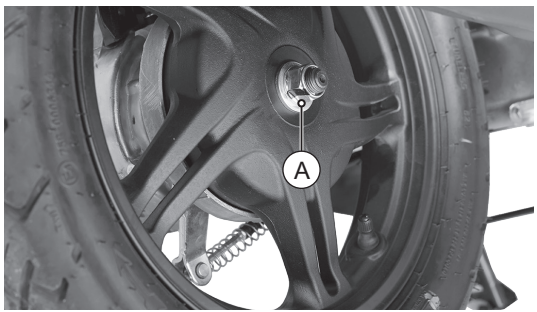

⚠ Warning

Always make sure, whenever the wheel is removed, the axle nuts are tightened properly to the specified torque.

STORAGE PROCEDURES

For storage of your scooter for longer period of over a month and above, we recommend to carry out the following steps:

1. Clean the vehicle thoroughly. Park the vehicle on centre stand.
2. Warm up the engine and drain engine oil and transmission oil. Store the oil, if new, in a dust free container.
3. Empty the fuel tank.
4. Remove the spark plug and feed in several drops of engine oil through spark plug hole. Crank the engine few times and reinstall the spark plug.
5. Remove the battery, store it away from direct sunlight and freezing temperatures.
6. Place a suitable support at the bottom of the foot board so that both the tyres are off the ground. This will ensure better tyre life.
7. Cover up the vehicle completely with a clean tarpaulin or any other suitable cover. Store the vehicle inside a garage or similar area to avoid damage due to dust and rain. Make sure that the storage area is well ventilated and free from any source of flame or spark.

Caution

Do not park the vehicle on a slope or soft ground or else it may fall down. The exhaust system becomes hot after a run. Park the vehicle in a place where pedestrians or children are not likely to touch the vehicle.

During storage, the battery must be recharged at recommended charger if stored more than a month.

TAKING THE VEHICLE OUT OF STORAGE FOR REGULAR USE

1. Take the vehicle out of garage and clean it thoroughly.
2. Remount the battery after bench charging if required.
3. Fill the engine oil (TVS TRU4 SKUUTA - SAE 10W30 API-SL, JASO MB oil) and check the oil level using gauge oil level.
4. Fill the transmission oil (TVS TRU4 SKUUTA - SAE 10W30 API-SL, JASO MB oil) and check the oil level at the oil level screw.
5. Lubricate the parts as instructed in the periodic maintenance schedule.
6. Fill up fresh petrol in the fuel tank.
7. Check and inflate the tyres to the specified tyre pressure.
8. Check and correct the points mentioned in page No. 38.
9. Turn the ignition switch to 'ON' position. Retract the side stand if the vehicle is parked on side stand. Start the engine and ride out.

Caution

Avoid using alkaline solution like detergent soaps for washing. This may damage head lamp and other lamp assemblies.

RECOMMENDED TIPS WHEN TAKING A LONG TRIP OF MORE THAN 500 KM:

A) Please keep the following items for use in case of emergency:
   1. Tool kit complete.
   2. Recommended spark plug one number.
   3. Turn signal lamp bulb one number.
   4. Throttle, front and rear brake cable each one.
   5. First aid kit.

B) Precautions to be taken for the journey:
   1. Ensure engine oil and transmission oil are up to the level.
   2. Adequate fuel in the fuel tank.

C) Check your scooter for the following:
   1. Tightness of all bolts and nuts with correct torque value.
   2. Fitness of tyres / tyre pressure / tread depth.
   3. All bulbs, indicators and horn functioning.
   4. Smooth functioning of all cables and their free play.
   5. Smoothness of steering operation.
   6. Front / rear brake function and rear brake lamp working.
   7. Front fork for any abnormality.
   8. Spark plug gap and condition of spark plug.
   9. Air filter element cleanliness.
   10. Correct idling speed.
   11. Lubrication of all items mentioned in the periodic maintenance schedule.
   12. Any other job as necessary.
   13. Have your vehicle checked at any TVS Motor Company Authorised Main Dealer or Authorised Dealer.

Caution

Long journey are to be taken only after the running-in period of 1000 km.

TVS

TVS geared to Care

xpresservice

The 1 Hour

Service Promise

Drive In. **Drive Out.**

Say bye-bye to waiting time for servicing your bike.

Get your vehicle serviced in 1 hour at no additional cost. Contact your nearest Dealership for details.†

†Facility available at selected Dealerships only. Terms and conditions apply

Busy Life?
Easy Servicing!

Now, service your bike anywhere, anytime.

- ★ Service the vehicle at your door step.
- ★ Available for regular maintenance or breakdown service only.
- ★ Offered at nominal convenience charges.

Contact your nearest Dealership for details.†

†Facility available at selected Dealerships only. Terms and conditions apply

Busy Life?
Easy Servicing!

Now, service your bike anywhere, anytime.

- ★ Service the vehicle at your door step.
- ★ Available for regular maintenance or breakdown service only.
- ★ Offered at nominal convenience charges.

Contact your nearest Dealership for details.†

†Facility available at selected Dealerships only. Terms and conditions apply

TVS Motor Company Limited ('the Company') give this warranty with respect to the TVS Jupiter / Jupiter Classic manufactured by the Company.

While the Company has taken every care to maintain quality in the manufacture of the TVS Jupiter / Jupiter Classic, the above said warranty is subject to other terms of warranty:

During 5 Years from the date of purchase or during the first 50,000 km of run for the vehicle in the hands of original retail purchaser, whichever is earlier, the parts of the vehicle covered under warranty which prove to the satisfaction of the Company to have a manufacturing defect will be repaired or replaced free of cost.

The Company's obligation under this warranty is limited to repairing or replacing, free of cost, those parts of the vehicle which upon examination by the Company may prove to the Company's satisfaction to have a manufacturing defect, and in such cases the Company's decision either to repair or replace the affected parts will be final. In the event of replacement of parts, the Company also reserves the right to use parts of the same brand as the affected parts or any other brand which is used by the Company in the course of manufacture. All parts replaced under this warranty will become the property of the Company and must be returned to the company.

Limitations of Warranty:

This warranty shall not apply to following condition:

1. Any natural wear and tear, including without limitation, aging.
2. Warranty claims on proprietary items such as tyres, tubes and batteries etc,. should be preferred by the user directly on the respective manufacturer, as per their warranty terms and the Company shall not be liable in any manner in respect to the same.
3. Parts repaired or replaced under this warranty are warranted only throughout the remainder of the original warranty period.
4. The Company is not liable for any delay in servicing due to reasons beyond the control of the Company or any of its Authorised Main Dealers / Authorised Dealers.
5. In any event, the Company is not liable for indirect, remote, incidental or consequential damages.

6. The Company may make any modification or improvement to vehicles in future production at any time without prior notice and without any obligation to install the same on vehicles previously dispatched for sale. Any claim under this warranty will lie only when the customer:
   - takes his vehicle to an Authorised Main Dealer / Authorised Dealer of the Company and reports the problem he / she felt in the vehicle to enable the Authorised Main Dealer / Authorised Dealer to inspect the same and assess the cause for the reported problems.
   - produces to such Authorised Main Dealer / Authorised Dealer the owner's manual for the concerned vehicle for verification of relevant details.
7. This is the only warranty given by the Company for the TVS Jupiter / Jupiter Classic. No employee, Dealer or other person is authorised to extend or enlarge this warranty.

⚠ Warning

Modifications to this vehicle not approved by the TVS Motor Company may cause loss of performance and render it unsafe for use and disqualifies for warranty coverage also.

Following Toll Free numbers can be contacted for battery related queries if any.

Incase of EXIDE battery, call :- 1800 103 5454

Incase of AMCO battery, call :- 1800 425 0096

Incase of TATA GREEN battery, call :- 1800 419 8888

Incase of AMARON battery, call :- 1800 425 5858

Following Toll Free numbers can be contacted for Tyre related queries if any.

Incase of TVS Srichakra, call :- 04522443300

Incase of JK tyre, call :- 18002581100

Incase of Maxxis tyre, call :- 1800 532 2888

List of parts not covered under warranty

ITEM	WHAT TO CHECK FOR
Normal Maintenance operations	Engine tune-up, decarbonizing, fuel system cleaning, oil changes, head light focusing, fastener retightening, ignition timing, clutch and brakes as well as other normal adjustments.
Wear & tear items	Chain, sprockets, clutch and brake linings, fasteners, shims, washers, oil seals, gaskets, O' rings and spokes etc.
Electrical	Bulbs, fuse etc.
Service Maintenance Parts	Oil filters, spark plug, air filter, SAI filter, oil and brake fluid
Rubber, rexine & plastic items	All hoses, pipes and plastic aesthetics
Proprietary Items	Battery, tyres and tubes (the warranty terms are subject to our agreement with proprietary OEM)
Others Factors	Parts of the vehicle getting affected due to atmospheric effect / environmental factors (rusting, paint peel off etc.). However, depending on the vehicle usage condition, warranty would be accepted up to 2 years from the date of purchase.
	Parts of the vehicle which have been tampered with, altered, repaired or replaced by persons not authorised by the Company and which in the sole judgement of the Company affect the performance of the vehicle.
	Parts which are used in conjunction with parts not made or recommended by the Company.

List of parts not covered under warranty

ITEM	WHAT TO CHECK FOR
Others Factors	Parts suffering damage or resultant damage by accident, misuse, negligent treatment, use of bad quality lubricants or impure fuel or by omission to follow the guidance and instructions contained in this owner's manual.
	Vehicles on which engine number or chassis number is deleted, defaced or altered. Vehicles on which any warranty service including scheduled paid service is not availed when it falls due (at TVS Motor Company Authorised Main Dealer / Authorised Dealer).
	Vehicles sold or transferred by original retail purchaser. Vehicles used for racing or any competition or used otherwise than for ordinary personal transportation. Vehicles attached with side cars etc. Vehicles which have been taken out of India. Vehicles affected by natural calamities like flood, earthquake, tsunami, storm etc,.
	If the vehicle has been used for commercial purpose like taxi or used for rental or hiring or any other purpose other than regular personal transportation.

SERVICE INFORMATION

There are seventeen services for TVS Jupiter / Jupiter Classic during warranty period. Of these, first four services are free services for which labour charges are free. In addition to these four free services, we have a scheme of thirteen pay services. For keeping the maintenance track of your vehicle, free and pay service record sheets are attached in the Service Handbook given to you during the time of your vehicle purchase. Please have the relevant record sheet filled by the Dealer who is carrying out the maintenance service.

For availing any of the seventeen warranty services, please take your vehicle and your Service Handbook to any of our Authorised Main Dealers or any of our Authorised Dealer. After effecting the service the Authorised Main Dealer or the Authorised Dealer will affix their stamp on the last column of free or pay service record sheet of Service Handbook for your record and reference. An OTP would be sent to customer's registered mobile number. The same to be shared with the servicing Dealer on or before vehicle delivery.

Periodic maintenance always helps good performance of an automobile and our services are planned to keep your TVS Jupiter / Jupiter Classic performing good. **Please note that carrying out the service for your vehicle at scheduled intervals at any of the TVS Motor Company Authorised Main Dealer / Authorised Dealer is necessary for availing of warranty.** And please also remember that, after the services are over, periodic servicing of your vehicle at appropriate intervals, depending upon its extent of use, will keep your vehicle at its best level of performance.

In case you need any clarification or assistance, please feel free to write to us mentioning the frame number, engine number and date of purchase of your vehicle also the name and place of the Authorised Main Dealer / Authorised Dealer from whom you bought the vehicle and getting it serviced.

Service Department
TVS MOTOR COMPANY LIMITED
P.O. Box No. 4, Harita, Hosur - 635 109,
TAMILNADU, INDIA.
Toll free no:- 1800-258-7111

Planned Service Schedule (kms or month whichever of the two occurs early)*

Sl.No.	Service	Type	Kms	Months
1	1st Service	Free	500 ~ 750	2
2	2nd Service		2500 ~ 3000	4
3	3rd Service		5000 ~ 6000	8
4	4th Service		8500 ~ 9000	12
5	5th Service	Pay	11500 ~ 12000	16
6	6th Service		14500 ~ 15000	20
7	7th Service		17500 ~ 18000	24
8	8th Service		20500 ~ 21000	28
9	9th Service		23500 ~ 24000	32
10	10th Service		26500 ~ 27000	36
11	11th Service		29500 ~ 30000	40

Sl.No.	Service	Type	Kms	Months
12	12th Service	Pay	32500 ~ 33000	44
13	13th Service		35500 ~ 36000	48
14	14th Service		38500 ~ 39000	51
15	15th Service		41500 ~ 42000	54
16	16th Service		44500 ~ 45000	57
17	17th Service		47500 ~ 48000	60

Note

Free service enables the customer to avail the service at free of labour charges. Charges for the pay service should be borne by the customer. Cost of engine oil, periodic maintenance parts, filter, brake fluids, all types of greases, petroleum jelly, distilled water, chain cleaner, lubricants, coolants, cleaning cloths for both free and paid services are chargeable to the customer.

** Please remember that, after the above schedule, periodic servicing of your vehicle at appropriate intervals, depending upon its extent of use, will keep your vehicle at its best level of performance.*

DESCRIPTION	TVS Jupiter	Jupiter Classic
MANUFACTURER	TVS Motor Company Limited P. B. No. 4, Harita,Hosur - 635 109, India TVS Motor Company Limited Village Bhatian, Bharatgarh Road, Teh Nalagarh, Dist. Solan. Himachal pradesh - 174 101, India	
ENGINE		
Type	Single cylinder, 4 stroke, fuel injection, air cooled, spark ignition engine	
Cylinder bore	53.5 mm	
Stroke	48.8 mm	
Piston displacement	109.7 cc	
Compression ratio	10 ± 0.5 : 1	
Air filter	Dry paper filter element with dry foam	
Oil filter	Wire mesh	
Lubrication system	Forced wet sump	
Maximum power in kW	5.8 @ 7500 rpm	
Maximum torque in Nm	8.8 @ 5500 rpm	
Maximum speed	78 km/h	
Engine idling rpm	1450 ± 100 rpm (under warm condition)	
Starting system	Kick starter / Electric starter	
Emission norms	BS VI	

DESCRIPTION	TVS Jupiter	Jupiter Classic
TRANSMISSION		
Clutch	Dry - Centrifugal clutch	
Primary transmission	CVT (Continuously Variable Transmission)	
Primary reduction	2.65 to 0.8	
Secondary reduction	10.47	
CHASSIS		
Overall length	1834 mm	
Overall width	650 mm	678 mm
Overall height	1115 mm	1286 mm
Seat length	705 mm	
Ground clearance (unladen)	163 mm	
Wheel base	1275 mm	
Kerb weight (with toolkit and 90% of fuel)	107 kg	109 kg
Pay load	130 kg	
Maximum laden weight	237 kg	239 kg
Steering angle	90°	
Caster angle	25°	
Frame	High rigidity underbone type	
Front suspension	Telescopic hydraulic	
Rear suspension	Toggle link, gas filled hydraulic damper	
Trail length	93 mm	

DESCRIPTION	TVS Jupiter	Jupiter Classic
BRAKES		
Front (Drum)	130 mm dia (hand operated)	
Rear (Drum)	130 mm dia (hand operated)	
TYRE		
Front tyre	90/90 - 12 54J (tubeless)	
Rear tyre	90/90 - 12 54J (tubeless)	
Front tyre pressure*	1.70 kg/cm² (24 PSI)	
Rear tyre pressure - Solo*	2.25 kg/cm² (32 PSI)	
Rear tyre pressure - Dual*	2.53 kg/cm² (36 PSI)	
ELECTRICAL		
Ignition system	ECU controlled ignition	
Spark plug	BOSCH UR5KCU / CHAMPION RG8MC5	
Spark plug gap	1.0 ~ 1.1 mm	
Battery type	12V, 4Ah MF battery	
Generator (flywheel magneto)	12V, 130 W	
Head lamp	9V, 9.5W High beam LED / 6V, 5W Low beam LED	
Tail / brake lamp	12V, 10/5 W	

** In cold condition*

DESCRIPTION	TVS Jupiter	Jupiter Classic
ELECTRICAL		
Turn signal lamps bulb	12V, 10W x 4	
Number plate lamp bulb	12V, 4W x 1	
Speedometer lamp bulb	12V, 1.7W x 2	
Turn signal indicator lamp bulb	12V, 1.7W x 2	
High beam indicator lamp	12V, LED	
Low fuel warning lamp	12V, LED	
Economy and power mode indicator lamp	12V, LED	
Side stand indicator lamp**	12V, LED	
Malfunction indicator lamp	12V, LED	
Horn	12V, DC	
Fuse	12V, 15A x 1 (Blade type) and 12V, 10A x 2 (Blade type)	

Caution

Using the bulb other than the specified rating can result in overloading of the electrical system or premature failure of the bulb.

***** Side stand indicator lamp will be applicable only for the vehicles produced after March 2022.***

DESCRIPTION	TVS Jupiter	Jupiter Classic
CAPACITIES		
Fuel tank capacity††	5.8 l	
Fuel	BS VI petrol with minimum RON 91 (containing upto 10% of ethanol by volume)	
Engine/transmission oil grade	TVS TRU4 SKUUTA oil (SAE 10W30 API-SL, JASO MB)	
Engine oil capacity	750 ~ 800 ml (during regular service) 800 ml (incase of disassembly)	
Transmission oil capacity	100 ml (during regular service) 120 ml (incase of disassembly)	
Front fork oil grade	Gabriel Premium front fork oil	
Front fork oil capacity	84 ± 1 ml per leg	

Note

Specifications are subject to change without notice.

†† The fuel tank is not a measuring instrument and the capacity of the fuel tank may vary from the indicated capacity

Dear Customer,

It is mandatory under the Motor Vehicles Act to insure all motor vehicles. No motor vehicle can be used in a public place without a valid policy of insurance issued by an authorised insurer. Driving a motor vehicle without any such insurance is an offense under Motor Vehicles Act.

To assist our Customers on their insurance requirements such as the prompt issue and renewal of policies as well as expeditious settlement of claims if any, our preferred insurers are:

Oriental insurance

HDFC ERGO
Take it easy!

Liberty General Insurance
Liberty General Insurance Limited
IRDA Registration No. 150

bharti AXA
suraksha ka naya nazariya

IFFCO-TOKIO
GENERAL INSURANCE
Muskurate Raho

TATA AIG INSURANCE
WITH YOU ALWAYS

RELIANCE GENERAL INSURANCE

ICICI Lombard
Nibhaye Vaade

TVS
TRU 4
SKUTA
ULTRA SMOOTH RIDING

TVS
TRU 4
PREMIUM
ULTRA SMOOTH RIDING
1/

3P
TVS
10W30 SL
HIGH PERFORMANCE ENGINE OIL
TRU 4
SYNTHETIC
ULTRA SMOOTH RIDING
1/

TVS
CHAIN
LUBRICANT
TRU
SPRAY

TVS MOTOR COMPANY LIMITED
P. B. No. 4, Harita, Hosur - 635 109, Tamil Nadu, India.
Telephone: +**91 (04344) 276780** Fax: +**91 (04344) 276878**
www.tvsmotor.com

tvsjupiter | www.tvsjupiter.com | **Call: 1800 315 7777.**