TVS

TVS Radeon

JIYO BULAND BADHO BULAND

ETF6 ECO THRUST

BS-VI

ALWAYS USE TVS-M GENUINE PARTS

CONTACT(S) FOR SUPPORT	1
FOREWORD	5
SAFETY INFORMATION	6
NOTICE	7
RUNNING-IN INFORMATION	8
SAFE RIDING TIPS	9
KNOW YOUR TVS RADEON	13
RIDING YOUR TVS RADEON	30
MAINTENANCE	36
WARRANTY AND SERVICES	62
SERVICE INFORMATION	66
EXPRESS SERVICE	69
EXPERT ON WHEELS	70
PICKUP AND DROP	71
TECHNICAL SPECIFICATIONS	72
GENERAL INFORMATION	75

Incase you need any Clarification please contact

TVS Motor Company Authorised Main Dealer / Authorised Dealer

Or

TVS Motor Company's Area Offices (flip over for addresses)

Or

Toll Free Number : 1800-258-7111

Email : customercare@tvsmotor.com

Disclaimer : TVS Motor Company or any of its officials / Authorized Main dealer / Authorized Dealer do not ask customers for bank / card / wallet details / authentication. In case you face any such claim, please report to the relevant local authorities immediately.

CONTACT AT OUR AREA OFFICES

TAMILNADU-1, 3 & 4

1. **TVS Motor Company Limited**
   V Floor, Gee Gee Universal,
   No. 2, MC Nichols Road,
   Chetpet, Chennai - 600 031.
   Phone : 044-28361651/28361654
   Email : AO.Chennai@tvsmotor.com
   AO.Madurai@tvsmotor.com

TAMILNADU-2

2. **TVS Motor Company Limited**
   No. 10, 2nd floor,
   Shree Shanmugapriya Towers,
   Kannuswamy Street,
   Behind Hotel Annapoorna,
   R S Puram, Coimbatore - 641 002.
   Phone : 0422-4350060/2541035
   Email : AO.Coimbatore@tvsmotor.com

KERALA

3. **TVS Motor Company Limited**
   Ambady Towers, Second Floor,
   Door No. 27/631, A6,
   Edappally-Pookkattupady Road,
   Edappally PO., Cochin - 682 024.
   Phone : 0484-2544578/2556938
   Email : AO.Cochin@tvsmotor.com

KARNATAKA-1, 2 & GOA

4. **TVS Motor Company Limited**
   No. 600, Anand Surya, 2nd Floor,
   15th Cross, 6th Phase, JP Nagar,
   Opp. BMTC Bus Stop,
   Bangalore - 560 078.
   Phone : 080-26653433
   Email : AO.Bangalore@tvsmotor.com
   AO.Hubli@tvsmotor.com

ANDHRAPRADESH -1 & 2

5. **TVS Motor Company Limited**
   Rukumani Towers, First Floor,
   No. 3-11-30, Plot No. 11,
   Paigha Colony, Behind Anand Theater,
   Secunderabad - 500 003.
   Phone : 040-27840590/27844419
   Email : AO.Hyderabad@tvsmotor.com
   AO.Vijayawada@tvsmotor.com

MAHARASHTRA-1 & 2

6. **TVS Motor Company Limited**
   No. 401, 4th Floor, The Chambers,
   Plot No. 4/12/3, Near Ganapati Chowk,
   Viman Nagar, Pune - 411 014.
   Phone : 020-26632111/26632110
   Email : Service.pune@tvsmotor.com

MAHARASHTRA-3 & CHATTISGARH

7. **TVS Motor Company Limited**
   No. 502B, 6th Floor, B Wing,
   Shriram Shyam Towers,
   Near LIC Square, Sardar,
   Nagpur - 440 001.
   Phone : 0712-2569932
   Email : Service.Nagpur@tvsmotor.com
   AO.Raipur@tvsmotor.com

GUJARATH

8. **TVS Motor Company Limited**
   109, Ayna Complex,
   Opp. Suvarna Villa Bungalows,
   100 ft Thaltej Hebbatpur Road,
   Off : S.G. Highway, Thaltej,
   Ahmedabad - 380 054.
   Phone : 079-65443748
   Email : AO.Ahmedabad@tvsmotor.com

MADHYA PRADESH-1 & 2

9. TVS Motor Company Limited
No. 211-212, 2nd Floor,
Chinar Incube Business Centre,
Chinar Fortune City,
Near Brindhavan Dhaba,
Hosangabad Road,
Bhopal - 462 026.
Phone : 0755-2499406/2499306
Email : AO.Bhopal@tvsmotor.com
AO.Indore@tvsmotor.com

RAJASTHAN-1 & 2

10. TVS Motor Company Limited
Plot No. 17-18,
2nd Floor of National Motors Building,
Jhotwara Industrial Area,
Jaipur - 302 012.
Phone : 0141-5150901/5150902
Email : AO.Jaipur@tvsmotor.com
AO.Udaipur@tvsmotor.com

DELHI & HARYANA

11. TVS Motor Company Limited
D-3 & D-4, 2nd Floor,
Sector - 10, Noida,
Uttar Pradesh - 201 301.
Phone : 011-29834640/29834773
Email : AO.Delhi@tvsmotor.com
AO.Haryana@tvsmotor.com

PUNJAB & CHANDIGARH

12. TVS Motor Company Limited
4th Floor, Royal Business Park,
Chandigarh Ambala Highway,
Zirkapur - 140 603.
Phone : 01762-464777/465777
Email : AO.Chandigarh@tvsmotor.com

UTTAR PRADESH WEST

13. TVS Motor Company Limited
D-3 & D-4, 2nd Floor,
Sector - 10, Noida,
Uttar Pradesh - 201 301.
Phone : 011-29834640/29834773
Email : AO.Upw@tvsmotor.com

UTTAR PRADESH CENTRAL & EAST

14. TVS Motor Company Limited
1st Floor, Cyber Tower, TC-34/V-2,
Vibhuti Khand, Gomti Nagar,
Lucknow - 226 010.
Phone : 0522-4918300/4918301
Email : AO.Upe@tvsmotor.com
AO.Upc@tvsmotor.com

WEST BENGAL

15. TVS Motor Company Limited
Ground Floor & First Floor,
133 A. S. P. Mukherjee Road,
Opp. Tollygunge Police Station,
Kolkatta - 700 026.
Phone : 033-24617096/24617092
Email : AO.Kolkatta@tvsmotor.com

BIHAR

16. TVS Motor Company Limited
N-Plaza, Jamal Road,
P.S. Kotwali,
Patna - 800 001.
Phone : 0612-2200068/2200069
Email : AO.BNJ@tvsmotor.com

ORISSA & JHARKHAND

17. TVS Motor Company Limited

No. 303, 3rd Floor,
Creative Plaza, Rasulgarh,
Bhubaneshwar - 751 010.
Phone : 0674-2580019
Email : AO.Bhubaneshwar@tvsmotor.com

NORTH EAST STATES

18. TVS Motor Company Limited

147, Udayan, Ganesh Guri,
Opp. Punjab National Bank,
R G B. Road, Guwahati - 781 005.
Phone : 0361-2202030/2202031
Email : AO.Guwahati@tvsmotor.com

Dear friend,

Thank you for choosing the all new very attractive TVS Radeon, the Strong Bike built for the confident and progressive Indian Man.

As a proud owner of TVS Radeon, you are now a part of a family of millions of satisfied TVS customers.

Your Radeon now comes equipped with ETFI (Eco Tuned Fuel Injection) BSVI technology to give you a smoother ride, improved mileage and an enjoyable riding experience.

The exciting TVS Radeon is specifically suited towards a multitude of use-cases which combine themes of comfort, durability, practicality and style. The very attractive TVS Radeon boasts of multiple first-in-class features and usage-led design, which never compromise on strength and reliability.

This manual explains the features and operations of your TVS Radeon. Please read it carefully and follow the instructions to enjoy years of safe riding.

To ensure reliable performance, we urge you to get your TVS Radeon serviced only at TVS Motor Company Authorised Main Dealers / Authorised Dealers at specified regular intervals.

Happy Riding!

TVS MOTOR COMPANY LIMITED

Operating this vehicle safely is an important responsibility of the rider. To help you make decisions on safety, we have provided necessary operating procedure and other information in this manual. This information alerts you on potential hazards that could hurt you or others. Since it is not possible to warn you about all the hazards associated with operating or maintaining the vehicle, you must use your own judgment.

You will find important safety information in following form in this manual. These words carry the following connotations:

Warning

*Disregarding this message might result in **injury to the rider or deadly accidents.***

Caution

*This message indicates special procedures or precautions to be followed to **avoid damage to the vehicle.***

Note

*This message provides further clarification for **clear understanding of any particular information.***

Take time to familiarize yourself with your TVS Radeon and its performance characteristics.

This Owner's Manual contains a host of useful information. Please take the time to read this manual before you ride your new TVS Radeon. Get familiarised with the operation of your motorcycle for maximum safety and pleasure. The better you know your vehicle, the more pleasure you will experience riding your new vehicle. Ensure that anyone else riding your TVS Radeon does the same.

All information, illustrations, photographs and specifications contained in this owner's manual are based on the latest product information available at the time of this publication. TVS Motor Company Limited may, however, incorporate modifications or improvements on its vehicles at any time without notice, and therefore, in such events it is possible that the relevant part of the owner's manual does not apply to your vehicle.

Prior permission of TVS Motor Company Limited is required for quoting, copying or reproducing any part of this owner's manual.

Note

Accessories shown in the picture may not be part of the standard equipment.

Your motorcycle is provided with the day time running lamp (DRL). The DRL glows automatically once the engine is started.

Since your vehicle is fitted with side stand cut-off system ensure to retract the side stand before starting the vehicle.

TVS Radeon comes with 'SYNCHRONIZED BRAKING TECHNOLOGY - SBT' which offers superior braking control. This new braking feature automatically activates front brake whenever the rear brake is used, thereby enhancing the braking performance of the vehicle. SBT assures more safety, reduces force required while braking and ensures lower changes of skidding.

SBT
SYNCHRONIZED BRAKING TECHNOLOGY

Revision 5, Dec 2021

The first 1000 km is a crucial part of your motorcycle. Proper running-in operation during this period helps in ensuring a **maximum life** and **smooth performance** of your motorcycle.

The reliability and performance of your motorcycle depends on the special care and restrain exercised during the running-in period. It is especially important that you avoid operating the engine in high speed (RPM), which could expose the engine parts to excessive stress. Recommended speed during the running-in is:

Maximum 50 kmph speed upto 1000 km (vary the engine speed for better mating of parts).

The first free service at 500 ~ 750 km is most important. During running-in period all the engine components and other parts will have set in. All adjustments to be restored, all fasteners to be tightened. Engine cum transmission oil to be replaced. Timely performance of the first free service will ensure optimum service life and performance from the engine.

Caution

Replacing the engine cum transmission oil during first free service is most important for better life of engine. Always use TVS TRU4 PREMIUM oil (SAE 10W30 API-SL, JASO MA2) for better performance and life.

Since your motorcycle is fitted with Evaporative Emission Control System, ***the motorcycle should not be laid on the floor during water wash****. Else it may lead to difficulty in starting and improper running of the motorcycle.*

SAFE RIDING RECOMMENDATIONS

Any two wheeler riding requires some precautions to be taken to ensure the safety of the rider, pillion and other road users. These precautions are:

Familiarise yourself with new TVS Radeon

Riding skill and your mechanical knowledge form the foundation of safe riding practices. We suggest you to practice riding TVS Radeon in a low-traffic condition until you are thoroughly familiar with your vehicle and its controls. Remember practice makes you perfect.

Riding apparel

Loose, fancy clothing can be uncomfortable and unsafe when riding a two-wheeler. Choose good quality two wheeler riding apparel.

Know your limits

Ride within the boundaries of your own skill at all times. Knowing these limits and staying within them will help you to avoid accidents.

⚠ Warning

Two wheeler safety starts with wearing a good quality helmet*. One of the most serious injuries that can happen is a head injury. Always wear an ISI approved helmet that should fit your head comfortably and securely. You should also have good quality goggles to protect your eyes and help your vision.*

To prevent or minimize accident, never consume alcohol or drugs before or during the operation of your vehicle. Even minimal consumption of these will affect the rider's ability to control the vehicle.

Posture

Proper vehicle riding starts with proper posture.

1. Sit erect on the seat at the position which you feel most comfortable.
2. Keep your arms relaxed to give extra cushion for body on uneven road surfaces.
3. Keep right arm and foot close to the brake lever and pedal, so as to enable fast action during panic braking.

⚠ Warning

One-hand riding is dangerous. *Keep both hands firmly on the handle bar and both feet securely on the foot rest. Under no circumstances should both the hands be removed from the handle bar, as it is very dangerous.*

Avoid use of mobile phones while riding as it could lead to fatal accident.

Do not downshift the gears in the midst of cornering. Slow down to a safe speed before negotiating a corner. If this is the first time that you are riding a vehicle of this type, we suggest that you practice on a safe, open area to thoroughly familiar with the operation of the vehicle.

4. Look widely instead of gazing at one point.
5. Alter your sitting location / posture slightly at intervals during long rides. This will reduce fatigue.

Cornering

When cornering, centrifugal force works in a direction perpendicular to the direction in which the vehicle is moving. Centrifugal force increases in proportion with speed and the radius of the corner.

During cornering, reduce speed so as to lessen the effects of centrifugal force. By all means, avoid abrupt application of brake or sudden steering.

Braking

For safe riding, it is very important to master the braking techniques.

1. Close / release the throttle.
2. Hold the vehicle upright as you apply the brake.
3. Progressive application of brake is safer.
4. Never declutch while braking at higher speeds.
5. **Apply both the brakes. 'SBT' provides additional braking even when only the rear brake is applied. But applying both the brakes helps you to use the full potential of the brakes.**

6. Riding down hills, while cornering and wet roads, close the throttle and down shift the gear to take advantage of gearbox and engine which acts as an additional brake. This will avoid the loss of control over the vehicle due to over speed.

Causes for poor braking

1. If the brake shoes / pads or drum / disc are worn out or if there is water or oil on them, sufficient friction does not develop and brakes do not work well.

⚠ Warning

As the vehicle speed increases, the stopping distance also increases progressively. Be sure that, you have sufficient distance between you and the vehicle or obstruction ahead of you.

Avoid directing the water jet directly towards brake drum / disc pads during water wash.

Using only the front or rear brake is dangerous and can cause skidding and loss of control. ***Apply both the brakes together and with great care on a wet road or other slippery surfaces.***

Any abrupt braking on slippery or irregular roads can cause loss of rider control.

2. Even when the brake works normally, if the road surface is wet or the tyre surface is worn-out, tyres do not take a firm hold on the surface, increasing the stopping distance.
3. Approximately 60% braking effect is from front brake. **Non-usage of front brake causes poor braking.**

ACCESSORY INSTALLATION AND SAFETY TIPS

Use extreme caution while selecting and installing the accessories for your motorcycle.

The addition of **unsuitable accessories can lead to unsafe operating conditions.** Your friendly Dealer will assist you in selecting quality accessories and installing them correctly.

While selecting the accessories, make sure the accessories **should not obstruct lighting, steerability, suspension level and ground clearance.** Please ensure that, if the tank cover is used, it is not getting en-trapped between fuel tank and fuel tank cap.

Additional electrical equipment is not acceptable as it will void the warranty terms of the vehicle.

EMISSION CONTROL

All the TVS vehicles are tested in the factory for optimum fuel efficiency and CO levels. If the vehicle needs any adjustments, please consult nearest TVS Motor Company Authorised Main Dealer / Authorised Dealer.

While adequate care is exercised at the factory to ensure that the emissions are within the limits, it is essential for the owner to always maintain the motorcycle in good condition by getting it periodically checked and serviced by TVS Motor Company Authorised Main Dealer / Authorised Dealer so that the emission and fuel consumption levels are maintained as per norms.

Crankcase emission control system

The engine of TVS Radeon is equipped with a closed crankcase system to prevent discharging crankcase emissions into the atmosphere. Blow-by gas is returned to the combustion chamber through the air cleaner and fuel system.

Evaporative Emission Control System

The TVS Radeon is equipped with an evaporative emission control system which consists of a canister and associated piping. This system prevents the escape of fuel vapors from the fuel tank.

⚠ Warning

If any abnormal jerk, startability issue are felt in the vehicle or noise due to sudden escape of gas during opening of fuel tank cap, immediately report to the TVS Motor Company Authorised Main Dealer / Authorised Dealer.

ⓘ Note

Your vehicle is tested and certified for emission which meets BS VI emission norms and is valid for initial 12 months from the date of purchase. Get your vehicle certified by the Government authorised emission testing station after initial 12 months of usage. And ensure to get the vehicle certified on expiry of the certificate obtained.

VEHICLE IDENTIFICATION NUMBER

The frame and engine serial numbers are the only means of identifying your vehicle from others of the same model and type. They are also required to assist your Dealer for ordering parts or referring to special information.

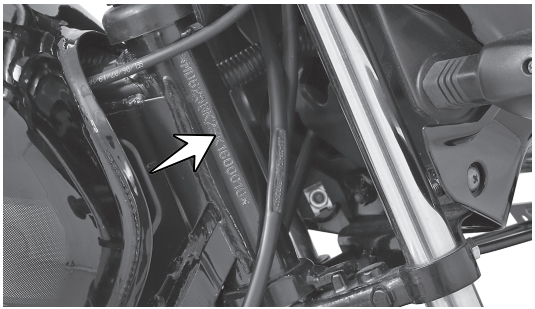

The frame serial number is stamped on the right side of the steering head tube.

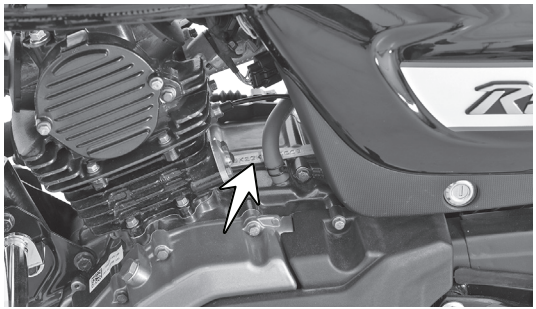

Engine serial number is stamped on the top surface of the left side crankcase assembly near cylinder block.

LOCATION OF PARTS - HANDLE BAR

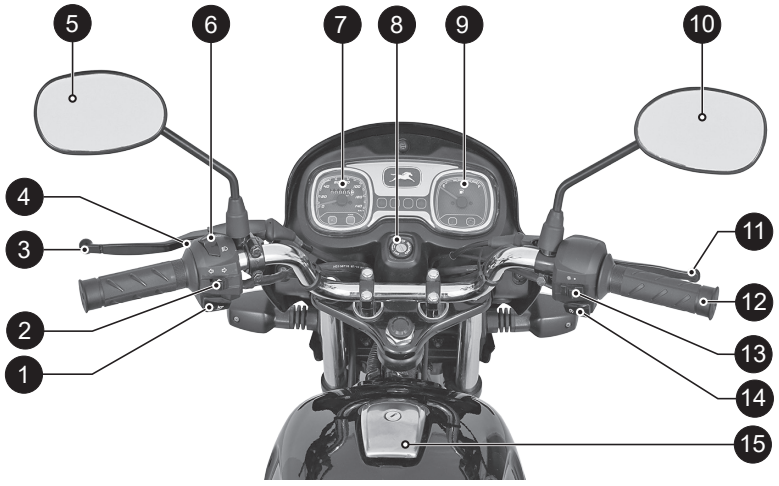

1. Horn switch
2. Turn signal lamp switch
3. Clutch lever
4. Pass by switch
5. Rear view mirror L
6. Beam control switch
7. Speedometer
8. Ignition cum steering lock
9. Fuel gauge
10. Rear view mirror R
11. Front brake lever
12. Throttle grip
13. Head lamp switch
14. Electric starter switch
15. Fuel tank cap

LOCATION OF PARTS - VEHICLE LEFT SIDE

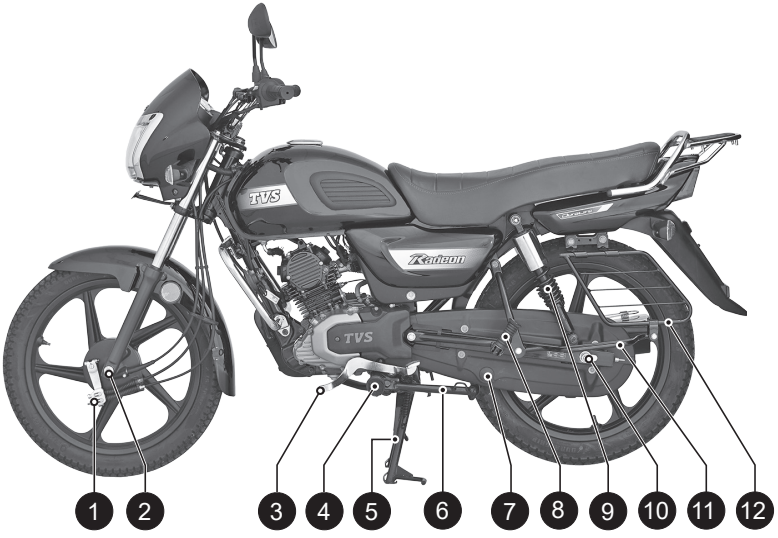

1. Front brake adjusters
2. Front wheel axle
3. Gear shift lever
4. Rider foot rest L
5. Centre stand
6. Side stand
7. Chain inspection window
8. Pillion foot rest L
9. Rear shock absorber L
10. Rear wheel axle
11. Lady foot rest
12. Saree guard

** Mandatory and optional accessory will be charged extra*

LOCATION OF PARTS - VEHICLE RIGHT SIDE

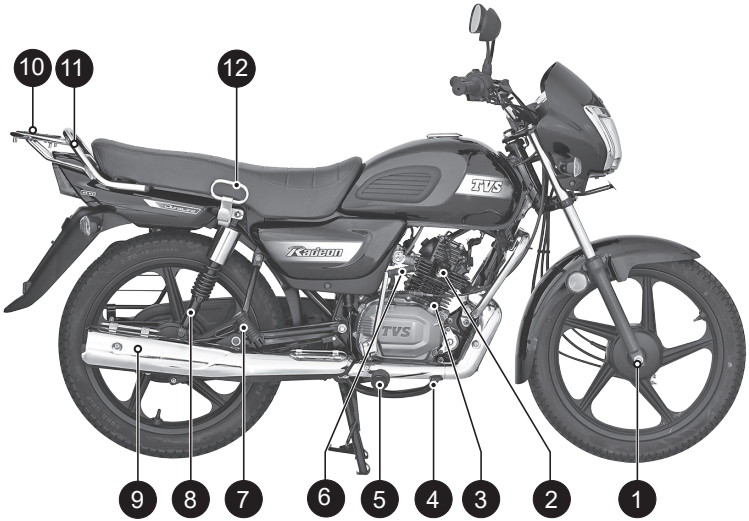

1. Front wheel axle nut
2. Spark plug
3. Gauge oil level
4. Rear brake pedal
5. Rider foot rest R
6. Kick starter lever
7. Pillion foot rest R
8. Rear shock absorber R
9. Muffler assembly
10. Cover carrier
11. Pillion handle
12. Lady Pillion Holder

LOCATION OF PARTS - VEHICLE FRONT & REAR

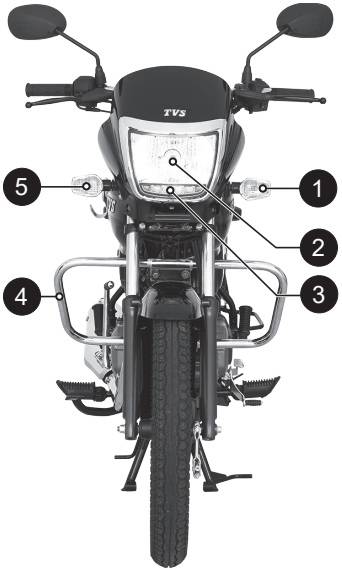

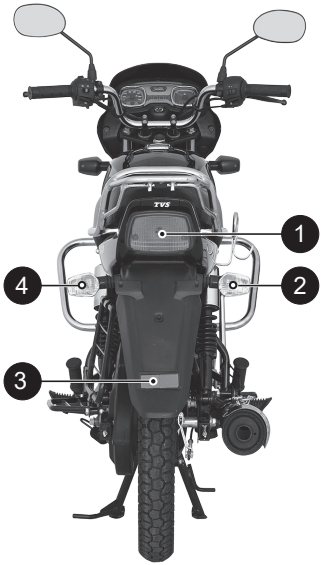

FRONT

1. Turn signal lamp front L
2. Head lamp assembly
3. DRL (day running lamp)
4. Crash guard
5. Turn signal lamp front R

REAR

1. Tail lamp assembly
2. Turn signal lamp rear R
3. Reflex reflector
4. Turn signal lamp rear L

CONTROL KEY

TVS Radeon comes with pair of identical control keys. These keys are to operate ignition cum steering lock, fuel tank cap and seat lock.

IGNITION CUM STEERING LOCK

There are three positions in the ignition cum steering lock. They are:

1. 'OFF' position

All the electrical circuits are turned 'OFF' in this position. Engine will not start. Key can be taken out.

2. 'ON' position

In this position, all the electrical circuits are turned 'ON' and the engine can be started now. Key cannot be removed in this position.

Note

When you switch on ignition key, the pump priming noise may be heard, which is normal. Avoid frequent SWITCH-OFF & ON of ignition key, to avoid unnecessary run of fuel pump.

DRL lamp, tail lamp and speedometer back light glows automatically once the engine is started without activating any other switches.

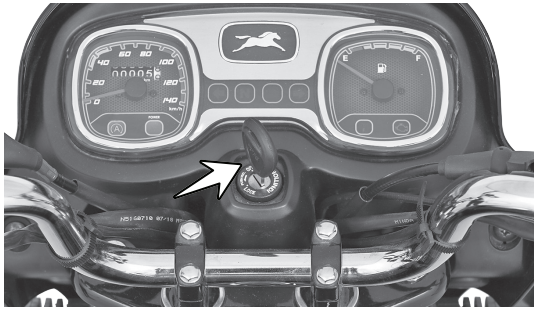

3. 'LOCK' position

TVS Radeon's steering can be locked in both 'left' and 'right' directions. To lock the steering, turn the handle bar all the way to the 'left' or 'right'.

Push the key in and turn it to the 'LOCK' position and take out. All the electrical circuits are turned 'OFF' in this position.

Insert the key into the lock and turn it to 'OFF' or 'ON' position to unlock the steering.

Warning

Never attempt to move the vehicle when the steering is locked, you may lose balance.

Caution

Leaving the ignition cum steering lock in 'ON' position will drain the battery when the vehicle is not in use. "Switch Off" and take the key out when the vehicle is not in use.

SPEEDOMETER ASSEMBLY

1. Speedometer

Indicates the vehicle speed in kilometers per hour.

2. Odometer

Registers and displays the total distance covered by the vehicle in kilometers

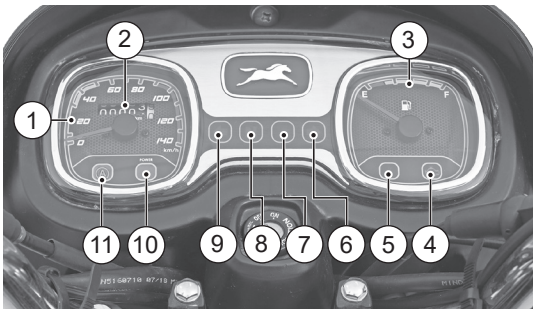

3. Fuel gauge

Fuel gauge indicates the approximate quantity of fuel available in fuel tank. **Once the fuel indication is in red band (marked in the dial) re-fill the fuel as soon as possible.**

4. Malfunction indicator lamp - MIL ( )

MIL is turned ON when the ECU detects a fault in the system.

If the malfunction indicator lamp ' ' is glowing continually when the engine is started, immediately contact the nearest TVS Motor Company Authorised Main Dealer or Authorised Dealer.

Caution

Before turning the IGNITION key to ON position, ensure the availability of adequate fuel in the tank. ***To avoid dry run of fuel pump, Fuel to be maintained above the red band.***

Never run the fuel pump dry, without fuel, to avoid failure of fuel pump.

5. Side stand indicator ( )**

The side stand warning indicator turns 'ON' to alert you whenever the vehicle's side stand is deployed (vehicle in parked condition).

Note

If the side stand is deployed the vehicle will not start. Retract the side stand to start the vehicle.

If there is error in the side stand sensor the indication will blink and the vehicle will not start. In such a condition, please visit the nearest TVS Motor Company Authorised Main Dealer / Authorised Dealer.

6. Turn signal indicator lamp right ( )

Flashes when the right side turn signal indication is activated.

7. High beam indicator lamp ( )

Glows when the head lamp high beam is activated.

8. Neutral indicator lamp (N)

Glows when the vehicle is in neutral and goes 'OFF' if the gear is shifted from neutral.

9. Turn signal indicator lamp left ( )

Flashes when the left side turn signal indication is activated.

10. Power indicator

Power indicator (amber lamp) indicates that the vehicle is running in power mode which results in reduced fuel economy. Power indicator will start blinking when engine is in idling for more than 20 seconds.

11. ISS indicator ( )

-NA-

Note

Always ride the vehicle in economy mode (green band indicated in speedo dial and power mode not glowing) for better fuel efficiency.

DAY TIME RUNNING LAMP (DRL)

TVS Radeon comes with a day time running LED lamp which glows automatically once the engine is started and continue to glow with 50% of illumination even after switching 'ON' the head lamp.

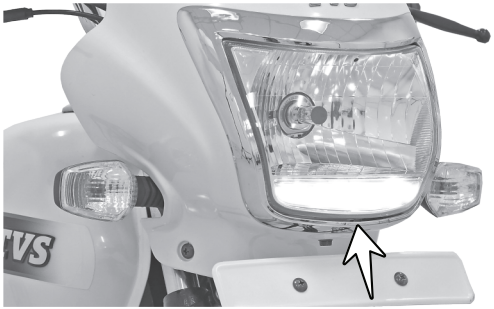

HANDLE BAR LEFT SIDE

1. Horn switch

Press the switch ' ' to operate the horn.

2. Turn signal lamp switch

Slide the turn signal lamp switch to left ' ' or right side ' ' to operate the respective turn signal lamps (LH/RH). Press the switch to turn 'OFF'.

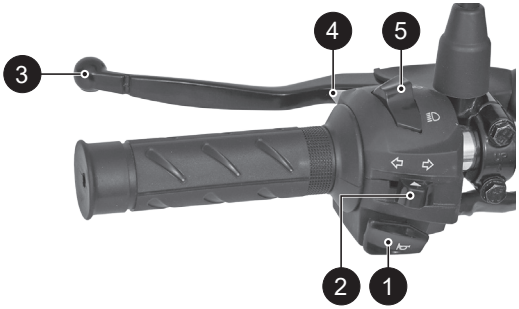

Warning

Always use the appropriate turn signal lamps when you intend to change lanes or take turns. Be sure to switch 'OFF' it after negotiating the lanes or turns.

3. Clutch lever

Use the clutch lever to disengage the drive to the rear wheel while shifting the gears. Squeezing the lever towards grip disengages the drive.

4. Pass by switch

Press the switch to flash the head lamp high beam. It is used to give signal to the vehicles coming from opposite direction while overtaking other vehicles during day. If the switch is pressed while the head lamp is switched ON and glowing in high beam, there will be no change in beam of head lamp.

5. Beam control switch

The head lamp beam (high/low) can be controlled by pressing the beam control switch.

Press the switch towards ' ≡D ' to turn-on the head lamp high beam or press the switch towards ' ≡D ' to turn-on the head lamp low beam.

⚠ Warning

Use appropriate head lamp beam 'high / low' as per the traffic and road conditions for your safety and to avoid inconvenience to other riders.

HANDLE BAR RIGHT SIDE

1. Front brake lever

The front brake is applied while squeezing the front brake lever gently towards the throttle grip. The brake lamp glows on application of front brake.

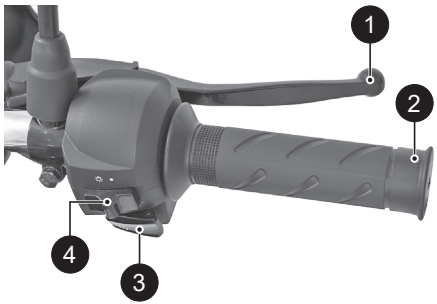

⚠ Warning

Since your vehicle is fitted with SBT brake system it is essential to maintain the brake system in good condition. Adjust the brake system at regular intervals for the proper working of SBT.

2. Throttle grip

Engine speed is controlled by the rotation of the throttle grip. Twist it towards you to increase the engine speed and away from you or release it to decrease the engine speed.

3. Electric starter switch*

Ensure the transmission is in neutral or else press the clutch lever and retract the side stand before engaging the electric starter switch ' '.

4. Head lamp switch

Head lamp switch has two positions. Working of switch at these positions are as followed:

OFF: The head lamp will be turned 'OFF' but other lamps like DRL lamp, speedometer back illumination and tail lamp glows when the switch is positioned at ' ● ' position with ignition ON and engine is running.

ON: The head lamp glows along with all other lamps when the switch is positioned at ' ' position and the engine is running. But DRL lamp illumination reduces to 50%.

** Applicable for electric start model only*

Warning

For cold starts, avoid using electric starter. Use kickstarter. A typical example is early morning start. This would reduce load on the battery and prevents quick drain.

Note

Head lamp glows only when the engine is in running condition.

FUEL TANK** CAP

To open the fuel tank cap (1), insert the control key (2) into the lock and turn it in clockwise direction and then lift the cap.

To close, rotate the key in clockwise direction and then gently push the cap on to the inlet and press at the front end till lock sound is heard. Take out the key upon hearing the locking sound.

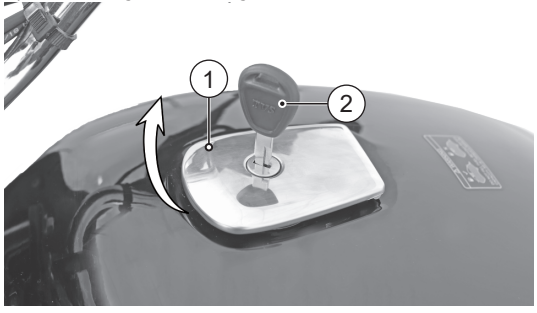

⚠ Warning

Avoid spilling of fuel on the hot engine. Never refill fuel near open flame. Do not smoke while refueling. Do not use cell phones while refueling.

*** The fuel tank is not a measuring instrument and the capacity of the fuel tank may slightly vary from the indicated capacity.*

EVAPORATIVE EMISSION CONTROL SYSTEM

This vehicle is fitted with Evaporative Emission Control System (EVAP). If there is any abnormal jerk, startability issue are felt in the vehicle or noise due to sudden escape of gas while opening the fuel tank cap, immediately report to the TVS Motor Company Authorised Main Dealer / Authorised Dealer.

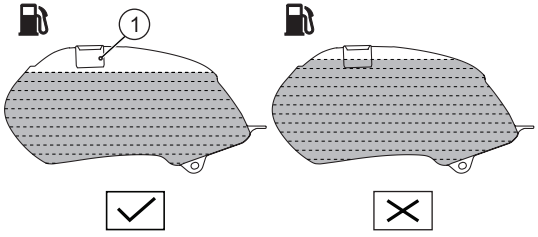

⚠ Caution

Never fill fuel beyond the fuel tank inlet (1). *Filling above the inlet may result in improper breathing of fuel tank which leads to difficulty in starting as well as improper running of the vehicle. Whenever refueling the bike fill only the recommended quantity of fuel.*

KICKSTARTER LEVER

The kickstarter lever is located on the right side of the vehicle.

To start the vehicle, keep the ignition in 'ON' condition and transmission in neutral. Keep your foot on the lever extension and kick from top and stroke to bottom with rapid motion.

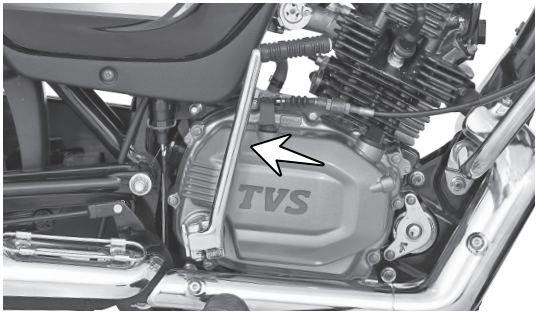

Note

Please note that the engine can be started with the kickstarter lever only when the vehicle is in neutral.

GEAR SHIFT LEVER

TVS Radeon has a heel and toe gear shift lever. To shift the gear from neutral to higher, press the rear end of gear shift lever by heel once for each gear after applying the clutch.

Similarly, to down shift to lower gears, press the front end of the lever by toe once for each gear after applying the clutch.

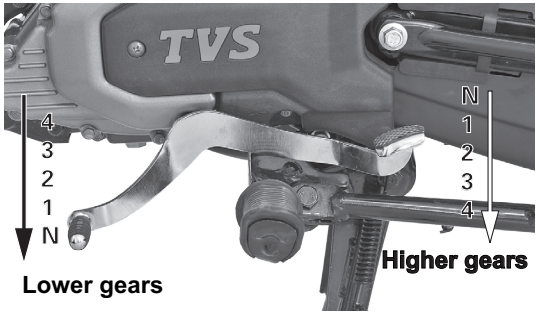

REAR BRAKE PEDAL

Rear brake pedal is located on the right side of the vehicle. Press the rear brake pedal with your right foot to apply the rear brake. The front brake will be also applied while applying the rear brake. The brake lamp glows on application of brake.

⚠ Warning

Brakes are items of personal safety and should always be maintained in proper condition.

CENTER STAND AND SIDE STAND

TVS Radeon is equipped with a center (1) and side stand (2). To place the vehicle on the center stand, hold the handle bar left grip with left hand and pillion handle with right hand.

Place your foot firmly on the center stand extension (1a) and press with adequate effort. Ensure both the legs of center stand are touching the ground before placing the vehicle on the stand.

Side stand can be operated by sitting on the vehicle with your left foot by pushing it away from the vehicle till it stops.

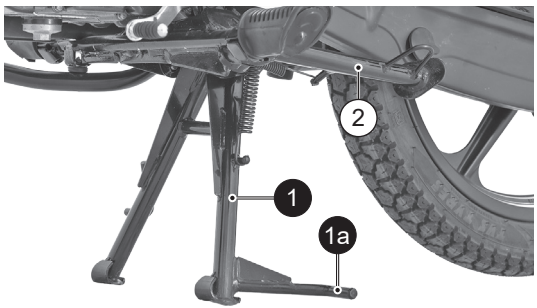

Warning

Park the motorcycle safely on a solid ground. On slopes,engage the first gear and park the vehicle in such a way that the front wheel faces uphill.

Always retract the side stand to its full up position before starting the vehicle. Else, the vehicle will not get started.

Caution

Never sit on the vehicle when it is supported by side stand. Always park the vehicle on a flat, firm surface.

COVER FRAME L

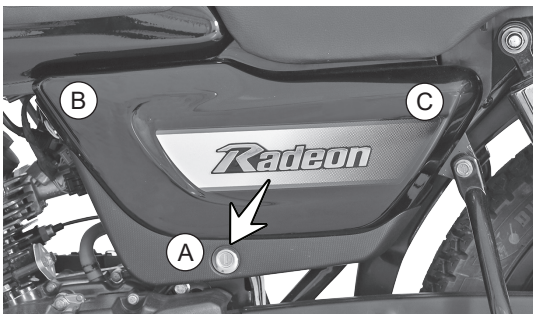

TVS Radeon is provided with lockable cover frame on left side for accessing the battery, tool kit and first aid kit. This cover can be opened in the following manner:

1. Insert the control key into the cover frame lock (A) and rotate it in clock wise direction.
2. Take out the cover frame by gently pulling out at front (B) and bottom (A) and sliding it forward.

To assemble the cover frame back

1. Locate the cover frame rear portion (C) carefully to the hook provided on the frame while ensuring the availability of cushion in the hook.
2. Locate the cover frame lug (B) on the hole provided in the fuel tank. While ensuring the availability of cushion in the hole and gently press cover frame.
3. Now lock the cover frame by turning the key in anti-clockwise direction.

Note

While re-fixing the cover frame, ensure the availability of rubber cushion in the fuel tank hole.

TOOL KIT AND FIRST AID KIT

To assist you in performing certain aspects of periodic maintenance and emergency repairs, a tool kit is supplied along with the vehicle. A first aid kit is also available with the tool kit

Both tool kit and first aid kit are located below the cover frame L. Remove the cover frame L as explained earlier to access the tool kit and first aid kit.

Tool kit consists one number each of the following:

1. 12x14 mm open end spanner
2. Combination screw driver bit
3. Screw driver handle
4. Tool bag

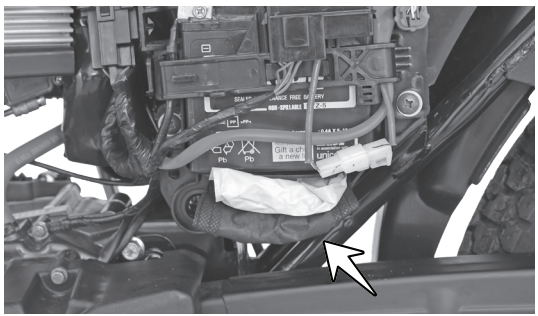

Note

It is recommended to use the tool kit in case of any emergency only. It is always advisable to take your vehicle to TVS Motor Company Authorised Main Dealer / Authorised Dealer.

SMART PHONE CHARGER*

Location for fixing a smart phone charger has been provided on the right side bottom of the housing head lamp of your vehicle. The smart phone charger supplied by the company can be fitted on your vehicle on chargeable basis. Ask your dealer to fix the same if required. Please follow the guidelines mentioned below for using it properly:-

DO's

1. Ensure that no water enters into the unit, by closing the USB flap properly.
2. Use the USB, if approved standard USB cable used for charging mobile.

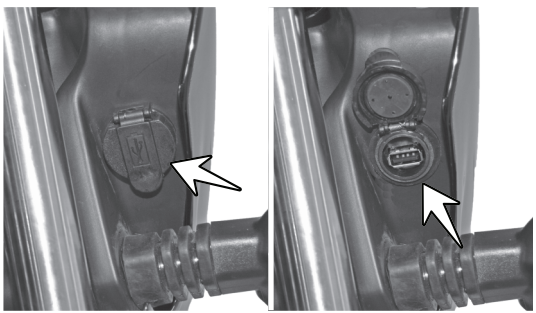

3. Do make sure the flap is not damaged while opening / inserting the USB cable.

DON'Ts

1. Do not leave the USB charging flap open / partially closed.
2. Do not attempt to use / charge any other device, other than mobile phones. Only one mobile phone should be charged at a given time.
3. Do not try to force the USB connector in, check whether it is inserted in the appropriate direction, to prevent the damage to the charger.
4. Do not charge your mobile when engine is off.

Caution

The charging time of the mobile may vary, depending on the mobile's battery state of charge. The rubber flap in the unit has been designed to prevent water entry and is not replaceable.

No warranty for charger in case of rubber flap cut.

** Optional accessory will be charged extra*

PRE RIDE INSPECTION

Check the following items before riding

ITEM	WHAT TO CHECK FOR
Engine cum transmission oil	Availability of oil upto the level (page no. 45)
Fuel	Enough fuel for the planned distance of running, fuel level indicator not in the red zone.
Tyres	Correct pressure (page no. 53) Adequate tread depth / No cracks or cuts
Battery	Proper working of speedometer lamp, tail lamp, license plate lamp, brake lamp, turn signal lamps, neutral lamp and electric starter
Lighting	Proper working of head lamp high beam / low beam and high beam indicator
Steering	Smooth movement / No play or looseness
Throttle	Correct free play of cable / Smooth operation
Clutch	Correct free play of cable (page no. 46) Smooth and progressive action
Brakes	Proper working of brake. Correct lever and pedal play (page no. 49) Availability of brake fluid and proper working of brake (page no. 48)*
Wheels	Free rotation
Malfunction indicator	Turned OFF after engine is started (page no. 19)

** Applicable only for Disc Brake version*

Starting the engine

Insert the control key into the ignition cum steering lock and turn it to the 'ON' position.

Ensure the availability of fuel in the tank. Keep the transmission in neutral and side stand is in retracted condition, press the electric starter switch to start the engine electrically or kick start.

When the engine is cold

1. Start the engine using kick starter with no opening / very less opening of throttle.
2. Once the engine is started and running stable ride the vehicle.

⚠ Caution

Once the vehicle is started, engine idling rpm will be high and will stabilize gradually. Do not keep the engine in idling rpm for long and do not open excessive throttle when engine is idling and the vehicle is parked. It leads to overheating of engine and damage to internal components.

⚠ Warning

Do not run the engine indoors where little or no ventilation available. Exhaust gases are extremely poisonous.

Setting the vehicle in motion

1. Depress the clutch lever and engage the first gear by pressing rear end of gear shift lever.
2. Open the throttle slowly and simultaneously release the clutch lever gently and gradually. The vehicle starts moving forward.
3. As the vehicle picks up speed, shift to the next higher gear by closing the throttle, applying the clutch and pressing the gear shift lever rear end once again.
4. Release the clutch lever and open the throttle smoothly. Select the required gear in similar manner.

Using the transmission

The transmission is provided to keep the engine to run smoothly in its normal operating speed range. The gear ratios have been carefully chosen to meet the characteristics of the engine.

The rider should always select the most suitable gear to achieve the necessary speed and pulling power smoothly.

Riding on hills / gradients

When climbing steep hills, the motorcycle may begin to slow down and show lack of power. At this point you should shift to a lower gear so that the engine will again be operating in its normal power range. Shift gears rapidly to prevent the motorcycle from losing momentum.

When riding down a hill, the engine may be used as braking by shifting to a lower gear.

Stopping and parking

1. Close the throttle completely and apply both the brakes simultaneously.
2. Down shift the gears as the road speed decreases. Bring the engine to neutral position just before the vehicle stops.
3. Turn the ignition 'OFF'.
4. Park the vehicle on a firm, flat surface.
5. Lock the steering.

Note

Ensure to maintain sufficient amount of fuel while riding the vehicle in up or down gradient.

Warning

Reduce speed to a safe limit before turning / cornering. Do not apply brake while turning / cornering. Do not disengage clutch before braking.

Since the engine and exhaust system becomes very hot, make sure to park the vehicle in a place where the pedestrians or children are not likely to touch the hot surface. Do not park near dry grass or any other flammable resources which might catch fire.

To avoid deterioration of paint gloss due to ultra violet rays and heat of sunlight, always park your motorcycle in a covered parking.

FUEL RECOMMENDATION

Use only BS VI petrol with minimum RON 91.

BS VI petrol containing upto 10% of ethanol by volume can be used.

Higher ethanol content in petrol can

- degrade plastic and rubber components of fuel system and vehicle parts
- cause corrosion damage to metal parts like fuel tank, etc.
- result in startability & drivability issues
- decrease fuel economy

Ethanol absorbs water very easily, resulting fuel separation. Extra care shall be taken to prevent moisture entry into fuel tank while filling ethanol blended petrol and water washing of vehicle.

Painted parts (viz. panels, covers) shall not come in contact with ethanol blended fuels.

Manufacturer is not responsible for any warranty issues that results from using ethanol blend in excess of 10% by volume.

In case of any abnormalities observed due to use of ethanol blended fuels, customers are advised to use a different fuel station/brand for standard E10 fuel or contact authorised service centres.

Caution

Never mix oil in petrol in the fuel tank. Always fill fuel from the reputed and reliable fuel stations.

CHECKS AND TIPS FOR IMPROVING FUEL ECONOMY

Regular checks

Carry out the periodic maintenance checks as specified in this manual (refer page no. 37).

Regular maintenance checks will save fuel and ensure trouble-free, enjoyable and safe riding besides keeping environment clean.

Spark plug

A dirty or defective spark plug leads to wastage of fuel due to incomplete combustion. Inspect the spark plug. Clean and adjust the spark plug only if necessary. If required replace the spark plug with a new one.

However the spark plug need to be replaced every 12000 kms or 1 year whichever is earlier. Always use recommended spark plug only.

Caution

Do not remove the spark plug when the engine is hot.

Air cleaner element

A dirty air cleaner element restricts airflow and increases fuel consumption. Replace the element every 12000 kms.

Since paper filter is used in your motorcycle it is not advised to clean the filter. In case of any abnormalities (heavy dust clogging, damage) replace it earlier than the 12000 km.

Clutch

Increase in engine rpm during acceleration and constant speed running, without increase in vehicle speed indicates clutch slip. The clutch slip will cause high fuel consumption, poor acceleration and overheating of engine.

If the condition persists even after adjusting the clutch lever play, immediately have the clutch checked by TVS Motor Company Authorised Main Dealer / Authorised Dealer.

Caution

Never drive the vehicle with the clutch lever pressed. This will reduce the life of clutch and affect the vehicle performance and fuel economy.

Engine cum transmission oil

Dirty or less engine cum transmission oil increases the friction between various parts of engine and reduces the engine life, thereby increases the fuel consumption.

Regularly inspect the engine cum transmission oil for correct level and top-up if necessary. Get it replaced at regular intervals as per the maintenance schedule Always use TVS TRU4 PREMIUM oil (SAE 10W30 API-SL, JASO MA2).

Fuel leak

If any fuel leak from tank is suspected, tow the vehicle to the nearest TVS Motor Company Authorised Main Dealer / Authorised Dealer.

Caution

Do not attempt to do any rectification, as fuel lines are normally pressurized upto 3.5 bar and any activity by any untrained personnel, may lead to unsafe condition.

Tyres

Low tyre pressure has adverse effects on the vehicle. The drag on the vehicle increases resulting in decreased fuel economy. Further more, handling may be adversely affected.

Check the tyre pressure regularly (weekly) and inflate them to the recommended pressure (refer page no. 53). Never use tyres which are worn out beyond the permissible limit.

Chain slackness

Check and ensure the drive chain slackness. Excess slackness leads to higher fuel consumption (refer page no. 56).

Wheel free movement

Check and ensure the free movement of wheels by rotating them at least once in a week to avoid wastage of fuel.

Fast starting from rest wastes fuel

A racing start from rest at full throttle will waste fuel and damage the engine. It also creates a potentially dangerous traffic situation. Fuel is wasted whenever the rider suddenly accelerate or apply brake.

Avoid unnecessary idling

While waiting for someone or stopping in signals for long time, if the engine is kept running at idle speed, it causes unnecessary wastage of fuel.

Avoid frequent braking

Anticipate corners and slopes as well as the traffic conditions. Unnecessary and frequent braking will reduce the fuel economy.

Note

The on-road mileage of TVS Radeon is dependent on several factors like road condition, quality of fuel, riding speed, operation of clutch and brake, tyre inflation, maintenance / timely servicing of vehicle, load etc. and hence will differ from the mileage given under standard test conditions such as made in recognised institutes.

MAINTENANCE SCHEDULE

The maintenance schedule indicates the intervals between periodic services. At the end of each interval, be sure to inspect, check, replace, adjust, lubricate and service as instructed. If the maintenance is not done periodically, it will result in rapid wear and severe damage to the vehicle. If the vehicle is used under high stress conditions such as continuous full throttle operation or if used / operated in dusty climate, certain jobs should be performed more often to ensure reliability of the vehicle. Cylinder head, steering components, suspension, chain and wheel components etc., are key items and require very special and careful servicing. TVS Motor Company Limited strongly recommends that the jobs as per the maintenance schedule be performed by your TVS Motor Company Authorised Main Dealer / Authorised Dealer.

Periodic inspections may reveal one or more parts that may need replacement. Whenever replacing parts on TVS Radeon, it is recommended that you use only the **TVS Motor Company Genuine** parts.

Caution

Proper running-in and maintenance are mandatory for making certain that your vehicle is reliable and gives optimum performance at all times. Be sure that the periodic maintenance is performed thoroughly in accordance with the instructions given in this owner's manual.

In more dusty areas, the air filter element may required early replacement than the mentioned kilometers to avoid costly damages to the engine.

PERIODIC MAINTENANCE SCHEDULE (months or km whichever occurs earlier)

Item	In free service					After free service		Remarks
Service km Period from the date of sale	1st 500 - 750 1 months	2nd 2500 - 3000 3 months	3rd 5000 - 6000 6 months	4th 8500 - 9000 9 months	5th 11500 - 12000 12 months	Every 3000 km 3 months	Every 6000 km 6 months	
Malfunction indicator lamp	I	I	I	I	I	I	–	Check and resolve the errors using diagnostic tool if the lamp is ON even after starting the engine
Engine cum transmission oil	R	I &T	R	I &T	R	I &T	R	
Oil filter (strainer)	C	–	C	–	C	–	C	
Centrifugal filter	–	–	C	–	C	–	C	
Spark plug	I	–	–	–	R	–	–	Inspect, Clean and adjust if required Replace every 12000 km
Air cleaner elements	I	–	–	–	R	–	–	Replace every 12000 km
Tappet clearance	I	–	I & A	–	I & A	–	I & A	Inspect for any noise / starting trouble and adjust if required.
Hose fuel	–	–	–	–	–	–	–	Inspect every service after four years. Replace if required.
Fuel filter	–	–	–	–	–	–	–	Replace every 24000 kms
Clutch and throttle play[1]	I, A & L	I, A & L	I, A & L	I, A & L	I, A & L	I, A & L	–	
Throttle grip	–	–	L	–	L	–	L	Lubricate using grease
Steering smooth operation / play	I & A	I & A	I & A	I & A	C, L & A	I & A	–	C & L with fresh Bechem
Front fork oil	–	–	–	–	–	–	–	Replace every 18000 km
Front and rear suspension	I	I	I	I	I	I	–	Inspect for proper functioning
All fasteners	I &TI	I &TI	I &TI	I &TI	I &TI	I &TI	–	
Drive chain	C, L & A	C, L & A	C, L & A	C, L & A	C, L & A	C, L & A	–	

[1] Inspect for proper operation and adjust play. Lubricate ends using grease

Contd...

Item Service km Period from the date of sale	In free service					After free service		Remarks
	1st 500 - 750 1 months	2nd 2500 - 3000 3 months	3rd 5000 - 6000 6 months	4th 8500 - 9000 9 months	5th 11500 - 12000 12 months	Every 3000 km 3 months	Every 6000 km 6 months	
All bulbs, horn and switches	I	I	I	I	I	I	–	Inspect for proper functioning
Head lamp beam	I & A	I & A	I & A	I & A	I & A	I & A	–	
Battery voltage[2]	I	I	I	I	I	I	–	
Brake effectiveness / play[3]	I & A	I & A	I & A	I & A	I & A	I & A	–	
Brake cams / SBT system parts	–	–	C & L	–	C & L	–	C & L	Lubricate using grease
Brake pad wear*	I	I	I	I	I	I	–	Replace if necessary
Brake fluid*	I & T	I & T	I & T	I & T	I & T	I & T	–	Replace every 21000 km
Brake hose*	I	I	I	I	I	I	–	Replace every three years
Master cylinder cups*	–	–	–	–	–	–	–	Replace every 21000 km
Disc brake SBT cable play[4]*	I	I	I	I	I	I	–	Inspect for brake levers rattling
Wheel freeness	I	I	I	I	I	I	–	
Tyre pressure at cold condition	I & S	I & S	I & S	I & S	I & S	I & S	–	
Centre / side stand pivot	L	L	L	L	L	L	–	Lubricate using TRU4 oil
Kick starter pedal pivot	L	L	L	L	L	L	–	Lubricate using TRU4 oil
Evaporative emission control system and hoses	I	I	I	I	I	I	–	Inspect every service after four years, replace if required.

R - Replace; I - Inspect; T - Top up; C - Clean; A - Adjust; L - Lubricate; TI - Tighten; S - Set

[2] Recharge if necessary [3] Lubricate brake pedal shaft every service using TRU4 oil

[4] Inspect the SBT inner cable and front brake lever slackness and adjust if required

** Applicable only for Disc Brake version*

RECOMMENDED LUBRICANTS

APPLICATION	QTY	MANUFACTURER	BRAND
Engine cum transmission oil	1000 ml	TVS Motor Company	TVS TRU4 PREMIUM oil (SAE 10W30 API-SL, JASO MA2)
Front fork oil	160 ± 2 ml / leg	IOC / Castrol	Teleshockab oil
Disc brake fluid*	–	TVS Girling	DOT 3 / DOT 4
Grease	–	Bharat petroleum IOC Bechem	MP Grease no. 3 Servo Gem no. 3 Bechem premium grade 3
Chain cleaner	–	TVS Motor Company	TRU SPRAY chain cleaner
Chain lubricant	–	TVS Motor Company	TRU SPRAY

** Applicable only for Disc Brake version*

SELF - MAINTENANCE PROCEDURES

MAINTENANCE FREE (MF) BATTERY

To ensure better performance and long life of battery, you are requested to follow the steps given bellow :

1. Place the vehicle on center stand on a flat surface.
2. Remove the cover frame L as explained in page no. 27.
3. Check the battery voltage. If the voltage measured is less than 12.4 Volts, charge the battery using TVS Motor Company Limited recommended battery charger only at TVS Motor Company Authorised Main Dealer / Authorised Dealer.

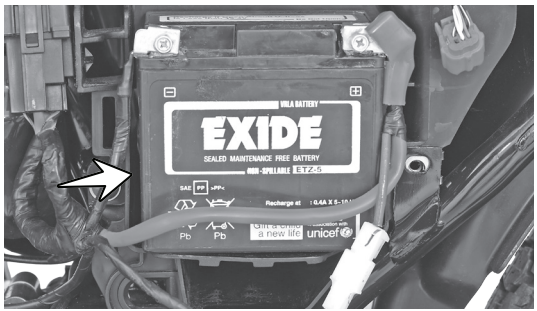

4. Adding any additional electrical accessories other than TVS Motor Company recommended ones, may lead to disqualification of warranty coverage.
5. While connecting the terminals, observe the correct polarity. Connect the red wire to the '+' terminal and black wire to the '–' terminal of the battery.
6. Apply petroleum jelly to the terminals to avoid corrosion.
7. Incase of any abnormality or for removal of battery from the vehicle, contact TVS Motor Company Main Dealer / Authorised Dealer.

Caution

Never check the battery charger by shorting the terminals. Always connect the positive terminal first (red wire) and then negative (black wire) to avoid sparking.

Inversion of the battery wires can damage the battery and the recharging system.

If the motorcycle is to remain unused for a long time (a month or longer), it is advisable to disconnect the battery cables or have the battery removed by skilled personnel.

Recommendations to maintain battery health during prolonged parking conditions

While your vehicle is parked for prolonged duration, battery continues to discharge and if left unattended can get completely discharged. It is recommended to ride the vehicle for minimum 60 km every week to keep the battery in healthy condition This could be at a stretch in one ride or several rides during the week.

The vehicle speed will vary during the ride but an average speed of minimum 30 kmph will be helpful to ensure proper battery charging. Use kick-starting, if available, to conserve battery charge during such period. This is only a recommendation to maintain battery charge and regular service schedules must be followed to maintain your vehicle in good running condition.

The following is recommendations to users regarding battery maintenance before, during and after long storage of battery:

1. Before Storage

a. Store the battery only after fully charging it.

b. Battery fuse to be disconnected and stored safely. This will reduce the sleep mode current and hence enhance storage life of battery.*

c. Alternatively, battery connecting wires (positive and negative wires) can be disconnected and fasteners can be secured with battery terminals.*

2. During Storage

a. Store it at room temperature or lower.

b. Store the vehicle in the shade and protected from rain and cover the vehicle to prevent rodents from entering and damaging the wires.

3. After Storage

a. Connect the wires and fuse, if disconnected earlier, with ignition switch in OFF position*

b. Start the vehicle by kick starting.

(Above recommendations do not consider storage effects on other systems such as induction and fuel systems and wheels).

Periodic Maintenance of Batteries:

- Keep top of battery clean.
- Check cables, clamps, and case for obvious damage or loose connections.
- Clean terminals and connectors as necessary.

* *To be done by skilled personnel*

- Recharge battery if voltage is below 12.4 Volts.
- Valve Regulate Lead Acid (VRLA) / Lead Acid batteries are prone to water damage. Any water entry, through vents or otherwise; will result in irreparable damage to the battery or the vehicle.

⚠ Warning

Battery develop explosive gases. Keep it away from heat sources. If charging is required the battery must be charged in well ventilated area.

Unusable battery must be disposed in environment friendly manner. Do not discard it with household thrash. Handover the battery to the battery dealers or to a recycle center that accept used battery.

⚠ Caution

Never operate the vehicle with discharged battery as it may damage electrical components.

Do not push start the vehicle, use a good battery to start the vehicle.

FUSE

Non-working of electrical systems may be due to safety fuse failure. Short circuit or overload in the electrical system are the main causes for fuse failure. Follow the procedure given below for inspecting and replacing the fuse.

1. Open the cover frame L as explained earlier (refer page no. 27).
2. The fuse case fitted near the battery contains a 10A fuse two numbers and a 15A fuse.
3. Open the fuse case and pull out the required fuse.

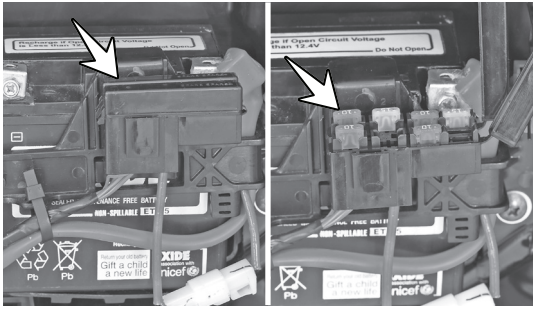

4. Replace the fuse with a new (extra fuses are provided inside the fuse case itself).
5. Close the fuse case and re-fix it into the battery band.
6. Turn 'ON' the ignition switch and check for proper functioning of electrical systems. Incase the fuse fails again, consult the nearest TVS Motor Company Authorised Main Dealer / Authorised Dealer.

⚠ Caution

*Do not use vehicle by **shorting the wires without a fuse.** This may result in overheating of electrical items / wiring and may result in fire.*

Never replace a fuse with a rating other than that prescribed, in order to avoid damage to the electrical equipment.

SPARK PLUG

1. Wipe and clean the dust and mud around the spark plug mounting to avoid falling inside the cylinder.
2. Pullout the suppressor cap from spark plug. Remove the spark plug using a plug spanner.

A spark plug with heavy carbon deposits will not produce strong sparks. Hence, only if necessary, remove the carbon deposits from the spark plug with a small wire brush or spark plug cleaning tool.

Inspect the spark plug electrodes (A) and (B) for any corrosion. If found any replace the spark plug with a new one.

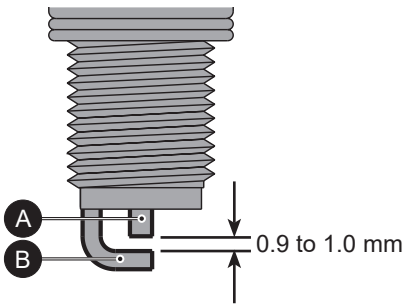

Inspect the spark plug gap with a wire gauge / feeler gauge. Readjust the spark plug gap to 0.9 ~ 1.0 mm if the gap is found more.

After cleaning and adjusting the gap, reinstall the spark plug and tighten by hand to avoid cross threading. Finally tighten using spark plug spanner. Do not over tight or cross thread the spark plug.

Caution

Always use only the recommended make and type of spark plug. ***Replace the spark plug every 12000 km.***

Cover the spark plug hole with a clean cloth when the plug is removed to prevent dust / water entry.

It is advisable to tighten the new spark plug by hand till the end, using plug spanner tighten by 1/4 turn. Then loosen the plug by 1/8 turn and re-tighten using plug spanner.

ENGINE CUM TRANSMISSION OIL LEVEL

Check the engine cum transmission oil level periodically. The gauge oil level is provided at the right side crankcase cover.

1. Place the vehicle on center stand on a flat surface. Wipe-off the surroundings of gauge oil level.
2. Remove the gauge oil level and wipe it clean.
3. Fix the gauge back to its mounting hole. Do not thread in.
4. Take out the gauge and check the oil level.

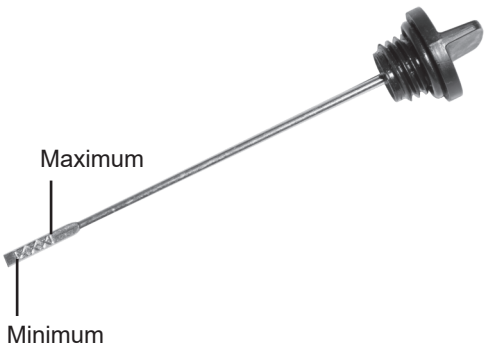

5. The oil level should be between minimum and maximum level marks of the gauge as shown.
6. If the oil level is less than the minimum level, add TVS TRU4 PREMIUM oil (SAE 10W30 API-SL, JASO MA2) upto the maximum level mark.
7. Wipe out the oil traces with a clean cloth to prevent dust accumulation and assemble back the gauge oil level.

⚠ Caution

Do not run the vehicle with insufficient / without engine cum transmission oil as it will cause serious damage to the engine components.

Excessive oil filling will cause oil leak and other malfunctions. Always use TVS TRU4 FULLY SYNTHETIC oil only (SAE 10W30 API-SL, JASO MA2).

Make sure that no foreign object gets in the crankcase while topping up the engine oil.

⚠ Warning

Correctly recycle or dispose the used engine oil in order to avoid environmental pollution.

CLUTCH ADJUSTMENT

Clutch lever free play is one of the most important adjustment which you may need to check in-between services for better life of the clutch plates.

The free play of the clutch lever should be 8 ~ 15 mm as measured at the clutch lever end at handle bar as shown before the clutch begins to disengage.

If the free play is not within the specified limit, adjust the clutch lever free play periodically by means of clutch cable adjuster at arm clutch release.

1. Ensure that the engine is cold (engine oil at room temperature).

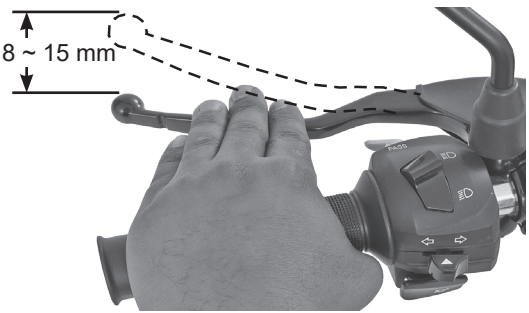

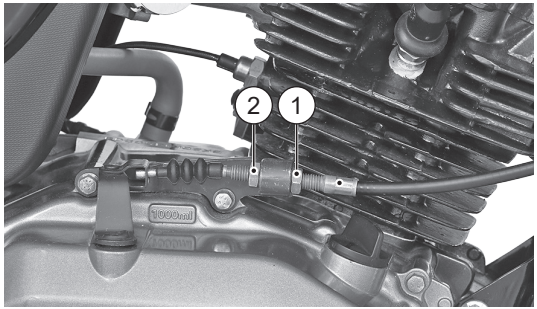

2. Loosen the lock nut (2) while holding the clutch cable adjusting nut (1).
3. Adjust the clutch cable adjuster nut (1) 'in' or 'out' to give sufficient play in the clutch lever.
4. After adjusting the play, hold the adjuster nut (1) in the same position and tighten the lock nut (2).

Caution

Too much or too less clutch lever free play will damage the clutch plates, thereby affecting the performance of the vehicle.

Adjust the clutch lever free play only when the engine is cold.

Caution

After adjusting free play properly, if there is a clutch slip or there is difficulty in shifting gear, visit your TVS Motor Company Authorised Main Dealer / Authorised Dealer for rectification.

REAR SHOCK ABSORBERS

TVS Radeon is provided with 5 step adjustable rear shock absorbers to meet different road and load. There are 5 notches for adjusting spring load.

If the spring is adjusted to the minimum notch, then the shock absorber will be softer which is good for light loads.

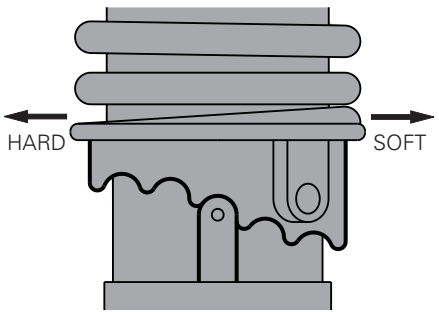

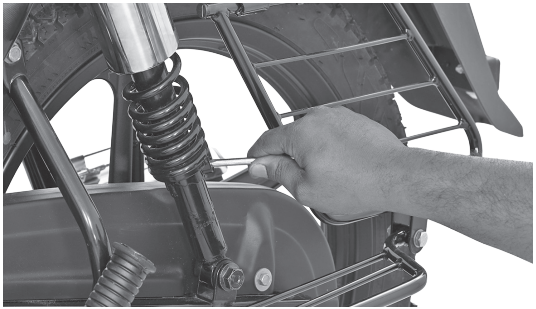

If the spring is adjusted to maximum notch, then it will be stiffer which is good for heavy loads.

Adjust the spring pre-load by shifting the adjuster to the required notch according to the different load conditions. The more you compress the spring, the suspension becomes more stiff.

Caution

Keep both left and right shock absorbers spring adjusters in the same position. Adjust step by step. Do not go at a stretch as it will damage the cam.

BRAKES

Front brake (disc type)

You can observe a master cylinder (1) on the right side of the handle bar, a caliper assembly (2) fitted to the fork leg R, a disc (3) to the front wheel and a high pressure hose (4) connecting the master cylinder and the caliper assembly.

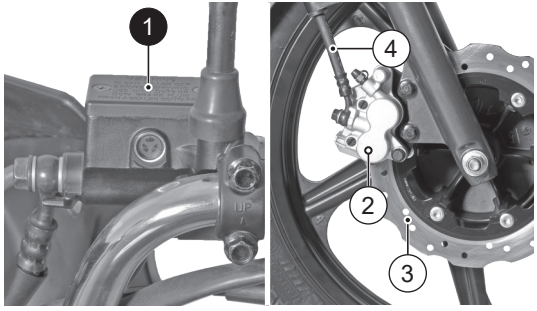

⚠ Warning

Brakes are items of personal safety and should always be maintained in proper condition.

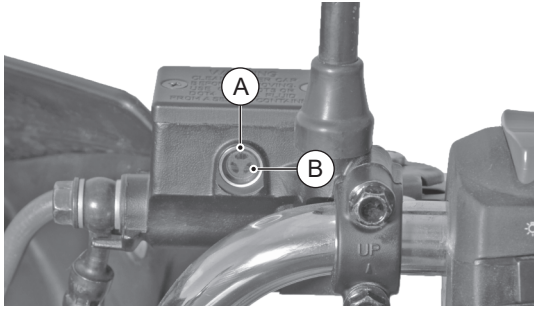

1. Check the master cylinder brake fluid level through the view piece glass (A).
2. Brake fluid level always should be above the 'MIN' mark (B) provided on the master cylinder view piece glass when the master cylinder is parallel to the ground.
3. If the brake fluid level is below the mark or while applying brake if you feel the brake is more spongy or ineffective due to air entry, contact TVS Motor Company Authorised Main Dealer / Authorised Dealer for topping-up the brake fluid, air bleeding and other brake related inspections.

Brake pad wear indicator

Visually check the brake pads wear. If the wear is found beyond the wear indicator groove as shown in the figure then, replace the brake pads as a set with a new one.

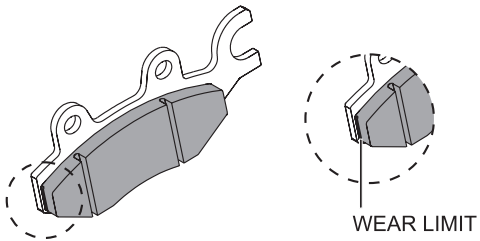

Warning

Lack of maintenance of the brake system increases the risk of accident. If you notice any malfunction in brake system contact nearest TVS Motor Company Authorised Main Dealer / Authorised Dealer.

Caution

Replace the brake pads as a set, if the wear limit indicator shows beyond the wear limit.

BRAKES

Front brake (drum type)

1. Measure the free play of the front brake lever at the lever end as shown.
2. The free play of the brake lever before the engagement of brake should be between 15 ~ 20 mm.

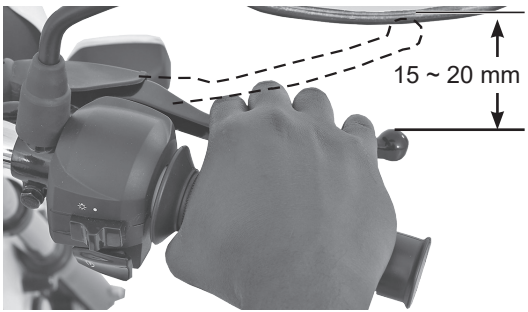

Warning

Since the vehicle is fitted with Synchronised Braking Technology (SBT) adjust the brakes with additional care. If not it may result in brakes not working properly.

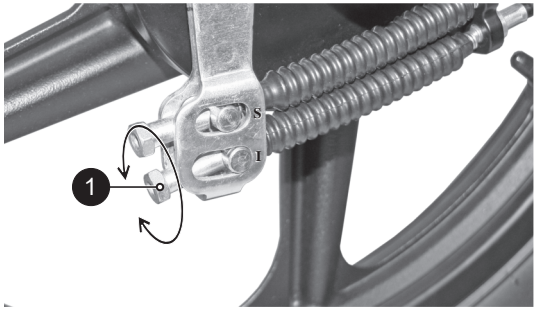

SBT
SYNCHRONIZED BRAKING TECHNOLOGY

3. Turn the adjuster nut at bottom side (1) in the slot marked as 'I' in clockwise direction for reducing the free play or in anti-clock wise direction for increasing the free play.
4. After obtaining the necessary free play at the lever end, inspect for the clearance between the bullet (3) and slot end (4) marked as 'S' as shown.
5. If any clearance is found, turn the top side adjuster nut (2) at slot marked as 'S' in clockwise direction until there is no clearance between the bullet (3) and slot top (4).
6. After adjusting the nut top, if any clearance is observed in between the bullet bottom (5) and slot bottom (6) marked as 'I' as shown, then turn the adjuster nut (2) in anti-clockwise until the clearance is closed.
7. Once again check and confirm the brake play at the lever end.

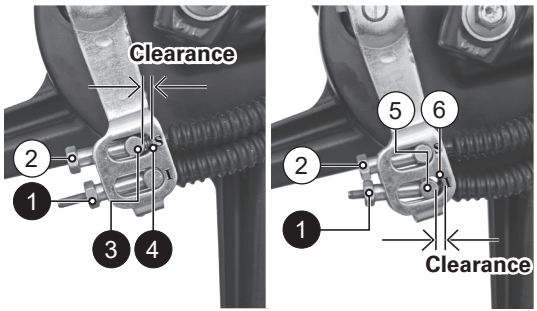

Note

Please contact TVS Motor Company Authorised Main Dealer / Authorised Dealer for any further assistance.

Rear brake

1. Measure the free play of the rear brake pedal at the pedal end as shown.
2. The free play of the brake pedal before the engagement of brake should be between 15 ~ 20 mm.

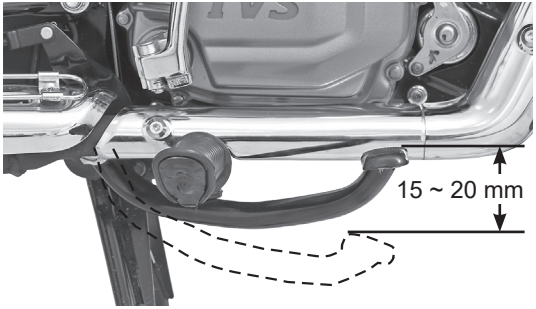

⚠ Warning

Check both front and rear brake play periodically. However the brake play needs to be adjusted more frequently depending upon the usage. ***Please remember that the rear brake lever free play adjustment to be done only after adjusting the front brake lever play.***

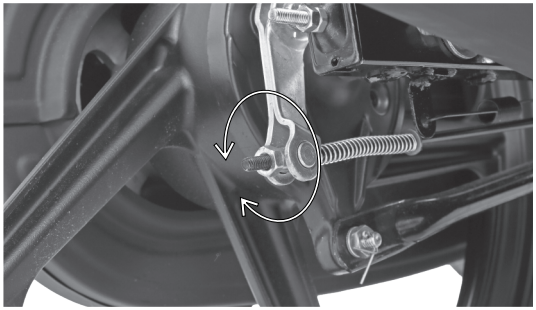

3. If the measured free play is more than the limit, adjust the nut provided at the rear wheel end to obtain the correct play.
4. Turn the adjuster nut clockwise to reduce the free play or turn it in anti-clockwise direction to increase the free play.

Brake shoe wear indicator

When the brake is applied, wear limit index mark (A) on both front and rear cam brake should be within the range of wear limit indicator (B) on panel assembly. Incase the index mark (A) is going beyond the wear limit indicator (B) range, index the cam lever to next slot (serration tooth) with the help of the nearest TVS Motor Company Authorised Main Dealer / Authorised Dealer to utilize the remaining shoe life.

If the cam brake index mark goes beyond the wear limit indicator range even after indexing the cam lever, replace the brake shoe as a set with the help of the nearest TVS Motor Company Authorised Main Dealer / Authorised Dealer.

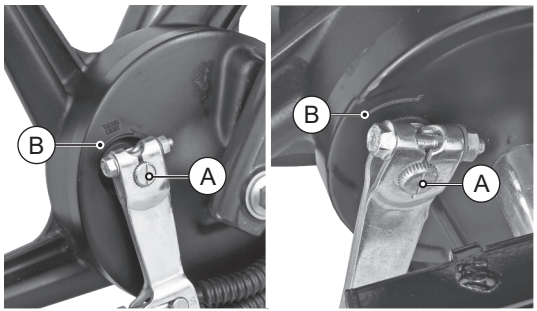

Caution

Replace the brake shoes as a set, if wear limit index mark (A) exceeds beyond the range of wear limit indicator (B) even after indexing the lever.

TYRES

Tyre pressure:

Check the tyre pressure atleast once in a week if not more frequently. Insufficient air pressure in the tyres not only hasten tyre wear, but also seriously affects the stability of the vehicle.

Under inflated tyres make smooth cornering difficult and over inflated tyres decreases the tyre contact with the ground which can lead to skidding and loss of control. **Lower tyre pressure consumes more fuel.** Be sure that the tyre pressure is within the specified limit at all times.

	Solo	Pillion
Front	1.75 kg/cm² (25 PSI)	1.75 kg/cm² (25 PSI)
Rear	2.25 kg/cm² (32 PSI)	2.53 kg/cm² (36 PSI)

Tyre tread condition

Operating the vehicle with excessively worn tyres will decrease riding stability and can lead to loss of control. It is recommended to replace the tyre when the tyre wears off to the tyre wear indicator level (indicated by TWI (A) on the tyre).

Tyre rotation direction

While reassembling the tyres, after removing from the wheel rim, ensure that the arrow mark (A) on the tyre facing the direction of wheel rotation.

⚠ Warning

The tyre inflation pressure in cold condition and the tyre tread condition are extremely important for the performance and safety of the rider. Check the tyres frequently for inflation pressure as well as the wear pattern on it.

Use of a tyre other than the standard may cause instability.

Tyre puncture

Your motorcycle is fitted with a tubeless tyre on both front and rear wheel. Incase of any puncture / tyre damage, it is advised to visit the nearest tyre manufacturer Dealer or the tyre repair shops who knows the repairing method of tubeless tyre.

It is not necessary to remove the tyre from wheel rim always to attend the puncture. Even though if there is need of tyre removal, it is strongly recommended to use a tyre removal / fitment machine.

If at all, tyre levers needs to be used, the levers should be free from sharp edges. Care should be taken not to damage the tyres and rims.

Caution

The side walls of the tubeless tyre which in contact with the wheel rim are only seals the air inside the wheel assembly. Hence care should be taken not to damage the side walls of the tyres during removal / reassembly.

Inflation Pressure Check - Condition

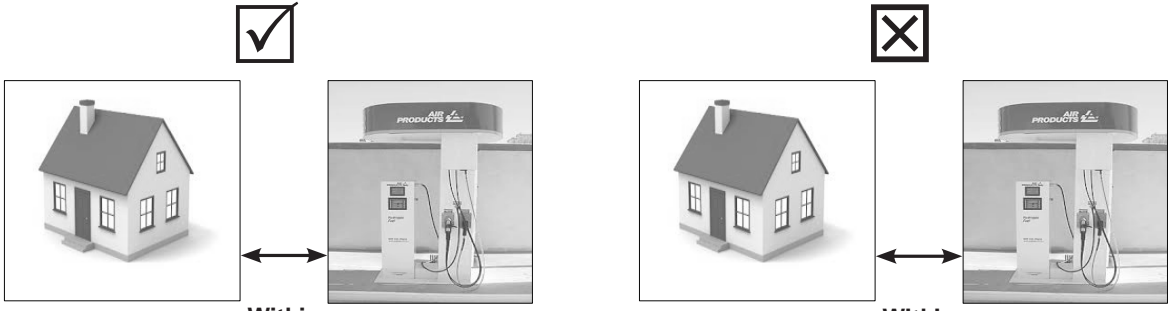

Note

If vehicle is in hold condition for long time

- *Need movement of vehicle to avoid particular spot of tyre not to touch the ground for more than week time.*
- *Inflation pressure should check on cold condition maximum travel time should not exceed more than 1 km.*
- *Weekly basis inflation pressure check helps to improve 10% of tread life & fuel efficiency.*

DRIVE CHAIN

Proper lubrication and adjustment of drive chain gives long service life of chain. Poor maintenance of chain causes premature wear or damage to the drive chain and sprockets. **Poor chain maintenance also affects the mileage of the vehicle.**

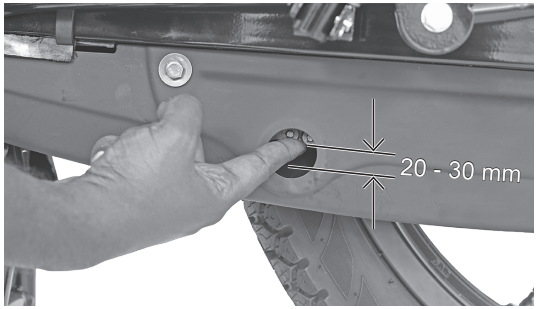

⚠ Warning

Riding with improperly adjusted chain / high slackness can cause the chain to come off the sprockets resulting in accident or serious damage to the motorcycle. Misalignment of rear wheel or sprockets can cause abnormal wear of chain and sprockets and results in unsafe riding condition.

The drive chain must be cleaned, checked, lubricated and adjusted at specified intervals mentioned in the maintenance schedule.

Even though the chain is cleaned, lubricated and adjusted during regular service by the Dealers, the user must clean the chain with TRU SPRAY chain cleaner & dry cloth and lubricate using TRU SPRAY / TRU4 oil frequently for better chain life and smooth vehicle running.

Maintain the drive chain in the following manner:

1. Place the vehicle on center stand with the transmission in neutral.
2. Remove the dust seal chain cover and inspect the drive chain slackness (vertical movement) using the finger as shown.
3. The slackness of the drive chain should not exceed the limit (maximum 20 ~ 30 mm). **Excess slackness consumes more fuel.**
4. If the slackness is found more, contact TVS Motor Company Authorised Main Dealer / Authorised Dealer for adjustment.
5. If it is within the limit, clean the chain with TRU SPRAY chain cleaner & dry cloth and lubricate using TRU SPRAY / TRU4 oil and refix the dust seal chain cover.

Caution

Lubricate the drive chain after the motorcycle is washed with water or riding in rainy / wet condition.

The chain must be serviced more frequently when the vehicle is operated under severe conditions like dusty, muddy, wet, high speed or frequent starting / stopping.

FRONT WHEEL REMOVAL AND REASSEMBLY

1. Remove the axle nut (1) along with a washer.
2. Pull out the axle (2) from the front wheel.
3. Incase of disc brake model, remove spacers from both side of the wheel.

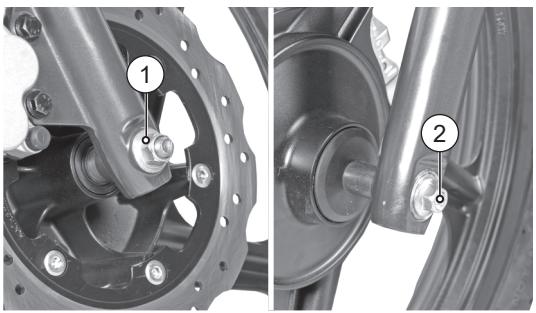

4. Incase of drum brake model, remove a spacer from right side of the wheel.
5. Place a support below the frame to prevent the vehicle from falling and lift the vehicle up.
6. Incase of drum brake model, dislocate the wheel assembly along with the brake panel. Separate the brake panel from the wheel and take out the wheel.
7. Incase of disc brake model, carefully dislocate the disc from the caliper assembly and slide the wheel out.
8. Reverse the procedure for reassembling.

Warning

Always make sure that whenever the wheel is removed, axle nut is properly re-tightened to the specified torque.

Incase of disc brake model, ensure the proper seating of disc in the caliper assembly during reassembly.

Incase of drum brake model, ensure the proper seating of brake panel with the fork leg assembly during reassembly.

REAR WHEEL REMOVAL AND REASSEMBLY

1. Remove the rear brake adjuster nut (1) and disconnect the brake rod from the brake cam lever.
2. Remove the split pin (2) and the nut (3) from torque link mounting with the brake panel and disconnect the torque link.
3. Remove the axle nut (4).
4. Pull out the axle (5) and take out the spacer bush from the rear wheel assembly.
5. Tilt the vehicle to the left and take out the wheel along with the brake panel. Separate the brake panel from the wheel.

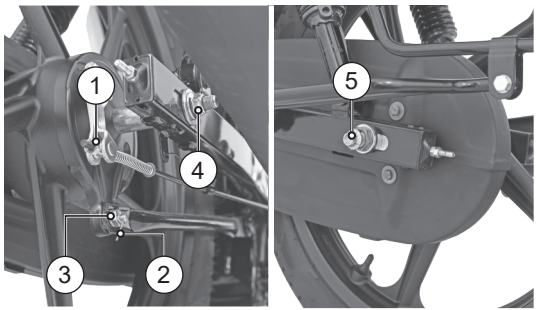

6. For locating and reassembling the rear wheel easily, engage the gear. This will arrest the free movement of the drum sprocket.
7. Reverse the procedure for reassembly.

Caution

Once the split pins are removed, replace them with new ones.

The chain play need to be re-checked and adjusted if required after wheel reassembly.

STORAGE PROCEDURES

For storage of your motorcycle for longer period of over a month and above, we recommend to carry out the following steps:

1. Clean the vehicle thoroughly. Park the vehicle on center stand.
2. Warm up the engine and drain engine cum transmission oil. Store the oil, if new, in a dust free container.
3. Empty the fuel tank.
4. Remove the spark plug and feed in several drops of engine cum transmission oil through the spark plug hole. Crank the engine few times and reinstall the spark plug.
5. Remove the battery, store it away from direct sunlight and freezing temperatures.
6. Place a suitable support at the bottom of the frame so that both the tyres are off the ground. This will ensure better tyre life.
7. Cover up the vehicle completely with a clean tarpaulin or any other suitable cover. Store the vehicle inside a garage or similar area to avoid damage due to dust and rain. Make sure that the storage area is well ventilated and free from any source of flame or spark.

Caution

Do not park the vehicle on a slope or soft ground or else it may fall down.

During storage, the battery must be recharged on a TVS Motor Company recommended battery charger atleast once in a month.

TAKING THE VEHICLE OUT OF STORAGE FOR REGULAR USE

1. Take the vehicle out of the garage and clean it thoroughly.
2. Remount the battery after bench charging if required.
3. Fill the engine cum transmission oil (TVS TRU4 PREMIUM - SAE 10W30 API-SL, JASO MA2) and check the oil level using gauge oil level.
4. Lubricate the parts as instructed in the periodic maintenance schedule.
5. Fill up fresh petrol in the fuel tank.
6. Check and inflate the tyres to the specified tyre pressure.
7. Check and correct the points mentioned in page no. 30.
8. Turn the ignition switch to 'ON' position. Retract the side stand if the vehicle is parked on side stand. Start the engine and allow it to idle for a few minutes and ride out.

Caution

Avoid using alkaline solution like detergent soaps for washing. This may damage head lamp and other lamp assemblies.

RECOMMENDED TIPS WHEN TAKING A LONG TRIP OF MORE THAN 500 KM:

A) Please keep the following items for use in case of emergency:
   1. Complete tool kit / first aid kit.
   2. Recommended spark plug one number.
   3. Head lamp, tail lamp and turn signal lamp bulb one each.
   4. Throttle, clutch and front brake cable one each.
   5. Drive chain lock - one number.

B) Precautions to be taken for the journey:
   1. Ensure engine cum transmission oil is up to the level.
   2. Adequate fuel in fuel tank.
   3. Brake oil level upto the mark incase of disc brake vehicle.

C) Check your motorcycle for the following:
   1. Tightness of all bolts and nuts with correct torque value.
   2. Fitness of tyres / tyre pressure / tread depth.
   3. All bulbs, indicators and horn functioning.

4. Smooth functioning of all cables and their free play.
5. Smoothness of steering operation.
6. Drive chain and sprocket condition. Chain adjustment.
7. Front / rear brake functioning and rear brake lamp switch adjustment.
8. Front fork for any abnormality.
9. Spark plug gap and condition of spark plug.
10. Air filter element cleanliness.
11. Correct idling speed.
12. Lubrication of all items mentioned in the periodic maintenance schedule.
13. Intactness of EVAP system hoses and canister.
14. Any other job as necessary.
15. Have your vehicle checked at any TVS Motor Company Authorised Main Dealer or Authorised Dealer.

Caution

Long journey are to be taken only after the running-in period of 1000 km.

Note

Ensure the first aid equipments are changed periodically based on the expiry.

TVS Motor Company Limited ('the Company') give this warranty with respect to the TVS Radeon manufactured by the Company.

While the Company has taken every care to maintain quality in the manufacture of the TVS Radeon, the above said warranty is subject to other terms of warranty:

During 5 Years from the date of purchase or during the first 60,000 km of run for the vehicle in the hands of original retail purchaser, whichever is earlier, the parts of the vehicle covered under warranty which prove to the satisfaction of the Company to have a manufacturing defect will be repaired or replaced free of cost.

The Company's obligation under this warranty is limited to repairing or replacing, free of cost, those parts of the vehicle which upon examination by the Company may prove to the Company's satisfaction to have a manufacturing defect, and in such cases the Company's decision either to repair or replace the affected parts will be final. In the event of replacement of parts, the Company also reserves the right to use parts of the same brand as the affected parts or any other brand which is used by the Company in the course of manufacture. All parts replaced under this warranty will become the property of the Company and must be returned to the company.

Limitations of Warranty:

This warranty shall not apply to following condition:

1. Any natural wear and tear, including without limitation, aging.
2. Warranty claims on proprietary items such as tyres, tubes and batteries etc,. should be preferred by the user directly on the respective manufacturer, as per their warranty terms and the Company shall not be liable in any manner in respect to the same.
3. Parts repaired or replaced under this warranty are warranted only throughout the remainder of the original warranty period.
4. The Company is not liable for any delay in servicing due to reasons beyond the control of the Company or any of its Authorised Main Dealers / Authorised Dealers.
5. In any event, the Company is not liable for indirect, remote, incidental or consequential damages.

6. The Company may make any modification or improvement to vehicles in future production at any time without prior notice and without any obligation to install the same on vehicles previously dispatched for sale.
7. Any claim under this warranty will lie only when the customer:
   - takes his vehicle to an Authorised Main Dealer / Authorised Dealer of the Company and reports the problem he / she felt in the vehicle to enable the Authorised Main Dealer / Authorised Dealer to inspect the same and assess the cause for the reported problems.
   - produces to such Authorised Main Dealer / Authorised Dealer the Service Handbook for the concerned vehicle for verification of relevant details.
8. This is the only warranty given by the Company for the TVS Radeon. No employee, Dealer or other person is authorised to extend or enlarge this warranty.

⚠ Warning

Modifications to this vehicle not approved by the TVS Motor Company may cause loss of performance and render it unsafe for use and disqualifies for warranty coverage also.

Following Toll Free numbers can be contacted for battery related queries if any.

Incase of EXIDE battery, call :- 1800 103 5454
Incase of AMCO battery, call :- 1800 425 0096
Incase of TATA GREEN battery, call :- 1800 419 8888
Incase of AMARON battery, call :- 1800 425 5858

Following Toll Free numbers can be contacted for Tyre related queries if any.

Incase of TVS Srichakra, call :- 04522443300
Incase of JK tyre, call :- 18002581100
Incase of Maxxis tyre, call :- 1800 532 2888

List of parts not covered under warranty

ITEM	WHAT TO CHECK FOR
Normal Maintenance operations	Engine tune-up, decarbonizing, oil changes, head light focusing, fastener retightening, ignition timing, clutch and brakes as well as other normal adjustments.
Wear & tear items	Chain, sprockets, clutch and brake linings, fasteners, shims, washers, oil seals, gaskets, O' rings and spokes etc.
Electrical	Bulbs , fuse, DRL
Service Maintenance Parts	Oil filters, spark plug, air filter, oil , fuel filter and brake fluid
Rubber, rexine & plastic items	All hoses , pipes and plastic aesthetics
Proprietary Items	Battery, tyres and tubes (the warranty terms are subject to our agreement with proprietary OEM)
Others Factors	Parts of the vehicle getting affected due to atmospheric effect / environmental factors (rusting, paint peel off etc.). However, depending on the vehicle usage condition, warranty would be accepted up to 2 years from the date of purchase.
	Parts of the vehicle which have been tampered with, altered, repaired or replaced by persons not authorised by the Company and which in the sole judgement of the Company affect the performance of the vehicle.
	Parts which are used in conjunction with parts not made or recommended by the Company.

List of parts not covered under warranty

ITEM	WHAT TO CHECK FOR
Others Factors	Parts suffering damage or resultant damage by accident, misuse, negligent treatment, use of bad quality lubricants or impure fuel or by omission to follow the guidance and instructions contained in this owner's manual.
	Vehicles on which engine number or chassis number is deleted, defaced or altered. Vehicles on which any warranty service including scheduled paid service is not availed when it falls due (at TVS Motor Company Authorised Main Dealer / Authorised Dealer).
	Vehicles sold or transferred by original retail purchaser. Vehicles used for racing or any competition or used otherwise than for ordinary personal transportation. Vehicles attached with side cars etc. Vehicles which have been taken out of India. Vehicles affected by natural calamities like flood, earthquake, tsunami, storm etc,. If the vehicle has been used for commercial purpose like taxi or used for rental or hiring or any other purpose other than regular personal transportation.

SERVICE INFORMATION

There are twenty one services for TVS Radeon during warranty period. Of these, the first five services are free services for which labour charges are free. In addition to these five free services, we have a scheme of sixteen pay services. For keeping maintenance track of your vehicle, free and pay service record sheets are attached in the Service Handbook given to you during the time of your vehicle purchase. Please have the relevant record sheet filled by the Dealer who is carrying out the maintenance service.

For availing any of the twenty one warranty services, please take your vehicle and your Service Handbook to any of our Authorised Main Dealer or any of our Authorised Dealer. After effecting the service the Authorised Main Dealer or the Authorised Dealer will affix their stamp on the last column of the free or pay service record sheet of Service Handbook for your record and reference. An OTP would be sent to customer's registered mobile number. The same to be shared with the servicing Dealer on or before vehicle delivery.

Periodic maintenance always helps good performance of an automobile and our services are planned to keep your TVS Radeon performing good. **Please note that carrying out the service for your vehicle at scheduled intervals at any of the TVS Motor Company Authorised Main Dealer / Authorised Dealer is necessary for availing of warranty.** And please also remember that, after the services are over, periodic servicing of your vehicle at appropriate intervals, depending upon its extent of use, will keep your vehicle at its best level of performance.

In case you need any clarification or assistance, please feel free to write to us mentioning the frame number, engine number and the date of purchase of your vehicle also the name and place of the Authorised Main Dealer / Authorised Dealer from whom you bought the vehicle and getting it serviced.

Service Department
TVS MOTOR COMPANY LIMITED
P.O. Box No. 4, Harita, Hosur - 635 109,
TAMILNADU, INDIA.
Toll free no. :- 1800-258-7111

PLANNED SERVICE SCHEDULE (kms or month whichever of the two occurs early)

Sl. No.	SERVICE	TYPE	Kms	MONTHS
1	1st service	Free	500 ~750	1 month
2	2nd service		2500 ~ 3000	3 months
3	3rd service		5000 ~ 6000	6 months
4	4th service		8500 ~ 9000	9 months
5	5th service		11500 ~ 12000	12 months
6	6th service	Pay	14500 ~ 15000	15 months
7	7th service		17500 ~ 18000	18 months
8	8th service		20500 ~ 21000	21 months
9	9th service		23500 ~ 24000	24 months
10	10th service		26500 ~ 27000	27 months
11	11th service		29500 ~ 30000	30 months
12	12th service		32500 ~ 33000	33 months
13	13th service		35500 ~ 36000	36 months
14	14th service		38500 ~ 39000	39 months
15	15th service		41500 ~ 42000	42 months
16	16th service		44500 ~ 45000	45 months

Sl. No.	SERVICE	TYPE	Kms	MONTHS
17	17th service	Pay	47500 ~ 48000	48 months
18	18th service		50500 ~ 51000	51 months
19	19th service		53500 ~ 54000	54 months
20	20th service		56500 ~ 57000	57 months
21	21st service		59500 ~ 60000	60 months

Note

Free services enables the customer to avail the service at free of labour charges. Charges for the pay service should be borne by the customer. Cost of engine oil, periodic maintenance parts, filter, brake fluids, all types of greases, petroleum jelly, distilled water, chain cleaner, lubricants, coolants, cleaning cloths for both free and paid services are chargeable to the customer.

Please remember that, after the above schedule, periodic servicing of your vehicle at appropriate intervals, depending upon its extent of use, will keep your vehicle at its best level of performance.

TVS

TVS geared to Care

xpresservice

The 1 Hour

Service Promise

Drive In. **Drive Out.**

Say bye-bye to waiting time for servicing your bike.

Get your vehicle serviced in 1 hour at no additional cost. Contact your nearest Dealership for details.†

†Facility available at selected Dealerships only. Terms and conditions apply

Busy Life?
Easy Servicing!

Now, service your bike anywhere, anytime.

- ★ Service the vehicle at your door step.
- ★ Available for regular maintenance or breakdown service only.
- ★ Offered at nominal convenience charges.

Contact your nearest Dealership for details.†

†Facility available at selected Dealerships only. Terms and conditions apply

Busy Life?
Easy Servicing!

Now, service your bike anywhere, anytime.

- ★ Service the vehicle at your door step.
- ★ Available for regular maintenance or breakdown service only.
- ★ Offered at nominal convenience charges.

Contact your nearest Dealership for details.†

†Facility available at selected Dealerships only. Terms and conditions apply

MANUFACTURER : TVS MOTOR COMPANY LIMITED
P.B. No 4, Harita, Hosur - 635 109, India.

TVS MOTOR COMPANY LIMITED
Village Bhatian, Bharatgarh Road, Teh Nalagarh, Dist. Solan.
Himachal pradesh - 174 101, India

ENGINE

Type	: Single cylinder, 4 stroke, fuel injection, air cooled spark ignition engine
Cylinder bore	: 53.5 mm
Stroke	: 48.8 mm
Piston displacement	: 109.7 cc
Compression ratio	: 10 : 1
Air filter	: Paper filter element
Lubrication system	: Wet sump lubrication
Maximum power in kW	: 6.03 (8.4 PS) @ 7350 rpm
Maximum torque in Nm	: 8.7 Nm @ 4500 rpm
Maximum speed	: 90 km/h in 4th gear
Engine idling rpm	: 1500 ± 150 rpm (under warm condition)
Starting system	: Electric starter* / Kick starter
Emission norms	: BS VI

TRANSMISSION

Clutch	: Wet - Multi plate type
Transmission	: 4 speed constant mesh
Gear shift pattern	: All up, heel-toe shift
Primary transmission	: Spur gears
Secondary transmission	: Chain and sprockets

GEAR RATIOS

I Gear	: 3.273
II Gear	: 1.765
III gear	: 1.238
IV gear	: 0.958
Primary reduction	: 3.722
Secondary reduction	: 2.929

** Applicable for electric start model only*

CHASSIS

Overall length	: 2025 mm
Overall width	: 705 mm
Overall height	: 1080 mm
Ground clearance	: 180 mm (unladen)
Wheel base	: 1265 mm
Kerb weight	: 116 kg (front Drum brake version)
(with tool kit & 90% of fuel)	: 118 kg (front Disc brake version)
Pay load	: 130 kg
Maximum laden weight	: 246 kg (front Drum Brake version)
	: 248 kg (front Disc Brake version)
Steering angle	: 88°
Caster angle	: 26°
Frame	: Single cradle tubular frame
Front suspension	: Telescopic oil damped
Rear suspension	: 5 step adjustable hydraulic shocks with swing arm
Trail length	: 83 mm

TYRE

Front tyre	: 2.75 - 18 42P 4PR (tubeless)
Rear tyre	: 3.00 - 18 52P 6PR (tubeless)

Tyre pressure

Front	: 1.75 kg/cm^2 (25 PSI)
Rear - Solo	: 2.25 kg/cm^2 (32 PSI)
Rear - Pillion	: 2.50 kg/cm^2 (36 PSI)

BRAKES

Front	: Hand operated, 130 mm dia
	: Hand operated, 240 mm petal disc**
Rear	: Foot operated, 110 mm dia

ELECTRICAL

Ignition system	: ECU - Electronic Control Unit
Spark plug	: BOSCH UR5KCW / CHAMPION RG8MC4
Spark plug gap	: 0.9 ~ 1.0 mm
Magneto	: 12V, 160W (fly wheel magneto)
Battery	: 12V, 4 Ah Maintenance free battery
Head lamp bulb	: 12V, HS1 35/35W x 1
DRL lamps	: 12V, LED 5W
Tail / brake lamp bulb	: 12V, 5/21W x 1
Turn signal lamps bulb	: 12V, 10W x 4
Speedometer lamp bulb	: 12V, 3.4W x 2

*** Applicable only for disc brake vehicle*

ELECTRICAL

Turn signal indicator lamp bulb	: 12V, 1.7W x 2
High beam indicator lamp bulb	: 12V, 1.7W x 1
Neutral indicator lamp bulb	: 12V, 1.7W x 1
Power mode lamp bulb	: 12V, LED
Malfunction indicator bulb	: 12V, LED
Side stand indicator lamp	: 12V, LED
Horn	: 12V, DC
Fuse (Blade type)	: 15A x 1 & 10A x 2

CAPACITIES

Fuel tank including reserve *	: 10 l
Fuel	: BS VI petrol with minimum RON 91(containing upto 10% of ethanol by volume)
Engine cum transmission oil	: TVS TRU4 PREMIUM oil (SAE 10W30 API-SL, JASO MA2)
Engine cum transmission oil capacity	: 1000 ml
Front fork oil grade	: IOC / Castrol teleshockab oil
Front fork oil capacity	: 160 ± 2 ml per leg
Disc brake oil grade**	: TVS Girling DOT 3 / DOT 4

Note

Specifications are subject to change without notice.

Caution

Using the bulb other than the specified rating can result in overloading of the electrical system or premature failure of the bulb.

* *The fuel tank is not a measuring instrument and the capacity of fuel tank may slightly vary from the indicated capacity.*

** *Applicable only for disc brake vehicle*

Dear Customer,

It is mandatory under the Motor Vehicles Act to insure all motor vehicles. No motor vehicle can be used in a public place without a valid policy of insurance issued by an authorised insurer. Driving a motor vehicle without any such insurance is an offense under Motor Vehicles Act.

To assist our Customers on their insurance requirements such as the prompt issue and renewal of policies as well as expeditious settlement of claims if any, our preferred insurers are:

Oriental insurance

HDFC ERGO
Take it easy!

Liberty General Insurance
Liberty General Insurance Limited
IRDA Registration No. 150

bharti AXA
suraksha ka naya nazariya

IFFCO-TOKIO
GENERAL INSURANCE
Muskurate Raho

TATA AIG INSURANCE
WITH YOU ALWAYS

RELIANCE GENERAL INSURANCE

ICICI Lombard
Nibhaye Vaade

TVS
TRU4
SKUUTA
ULTRA SMOOTH BIKING
1L
HIGH PERFORMANCE
SEMI-SYNTHETIC
FUEL EFFICIENT
4T SCOOTER
ENGINE OIL
MB

TVS
TRU4
PREMIUM
ULTRA SMOOTH BIKING
1L
HIGH PERFORMANCE
SEMI-SYNTHETIC
FUEL EFFICIENT
4T ENGINE OIL

3P
TVS
10W30 SL
HIGH PERFORMANCE ENGINE OIL
TRU4
SYNTHETIC
ULTRA SMOOTH BIKING
1L

TVS
CHAIN
LUBRICANT
TRU
SPRAY
Ultra-smooth biking
This spray is an effective chain lubricant
developed for automobile chains.

TVS MOTOR COMPANY

TVS Motor Company Limited, P.B. No. 4, Harita, Hosur - 635 109, Tamil Nadu, India.

Telephone: +91(4344)276780. Fax: +91(4344)277321/276878.

www.tvsmotor.com