TVS

RTR 160 4V

FOREWORD

Dear Racer,

Thank you for choosing the TVS RTR 160 4V

It features new decals, an LED headlamp, a secure wave bite key with over 9,000 combination, high performance radial tyres, a refreshed colour look and convenient feather touch start technology.

There's always a deep connection between man and race machine. The TVS RTR 160 4V takes that connection to another level, with TVS SmartXonnect - a Bluetooth based connection between your smartphone and race machine that provides call and SMS notifications, turn-by-turn navigation and comprehensive racing statistics to give you a winning edge.

As a proud owner of the TVS RTR 160 4V, you are now part of the 3.5 million strong TVS Racing families.

This manual explains the features and operations of your TVS RTR 160 4V. Please read it carefully and follow the instructions to enjoy the ultimate racing experience. To prolong your journey on the TVS RTR 160 4V, we urge you to get your services only at TVS Motor Company Authorised Distributors or Dealers / Authorised Service Centers.

Here's to your new lap on the RTR 160 4V.

TVS MOTOR COMPANY LIMITED

Always keep your owner's manual in the motorcycle and give it to the new owner if you ever sell your TVS RTR 160 4V.

Take time to familiarize yourself with your TVS RTR 160 4V and its performance characteristics.

This owner's manual contains a host of useful information. Please take the time to read this manual before you ride your new TVS RTR 160 4V. Get familiarised with the operation of your motorcycle for maximum safety and pleasure. The better you know your vehicle, the more pleasure you will experience riding your new vehicle. Ensure that anyone else riding your TVS RTR 160 4V does the same.

All information, illustrations, photographs and specifications contained in this owner's manual are based on the latest product information available at the time of this publication. TVS Motor Company Limited may, however, incorporate modifications or improvements on its vehicles at any time without notice, and therefore, in such events it is possible that the relevant part of the owner's manual does not apply to your vehicle.

Prior permission of TVS Motor Company Limited is required for quoting, copying or reproducing any part of this owner's manual.

Note

Accessories shown in the picture may not be a part of standard equipment.

Pictures shown in this manual are of RTR 160 4V rear disc brake version until it is specified.

Your motorcycle is provided with always glowing head lamp. The head lamp glows automatically once the engine is started.

Part Number : NF210650

Revision 1, June 2020

Operating this vehicle safely is an important responsibility of the rider. To help you make decisions on safety, we have provided necessary operating procedure and other information in this manual. This information alerts you on potential hazards that could hurt you or others. Since it is not possible to warn you about all the hazards associated with operating or maintaining the vehicle, you must use your own judgement.

You will find important safety information in following form in this manual. These words carry the following connotations:

Warning

Disregarding this message might result in ***injury to the rider or deadly accidents.***

Caution

This message indicates special procedures or precautions to be followed to ***avoid damage to the vehicle.***

Note

This message provides further clarification for ***clear understanding of any particular information.***

Running-in information	01
Safe riding tips	02
Know your TVS RTR 160 4V	06
Riding your TVS RTR 160 4V	51
Maintenance	57
Service record sheet	80
Technical specifications	83

TVS

RTR 160 4V

The first 1000 km is a crucial part of your motorcycle. Proper running-in operation during this period helps in ensuring a **maximum life** and **smooth performance** of your motorcycle.

The reliability and performance of your motorcycle depends on the special care and restrain exercised during the running-in period. It is especially important that you avoid operating the engine in high speed (RPM), which could expose the engine parts to excessive stress. Recommended speed during the running-in is:

Maximum 50 km/h speed upto 750 km (vary the engine speed for better mating of parts).

The first service at 500 ~ 750 km is most important. During running-in period all the engine components and other parts will have set in. All adjustments to be restored, all fasteners to be tightened. Engine cum transmission oil to be replaced. Timely performance of the first service will ensure optimum service life and performance from the engine.

Caution

Replacing the engine cum transmission oil during first service is most important for better life of engine. Always use TVS TRU4 FULLY SYNTHETIC oil (SAE 10W30 API-SL, JASO MA2) for better performance and life.

Since your motorcycle is fitted with Evaporative Emission Control System, ***the motorcycle should not be laid on the floor during water wash****. Else it may lead to difficulty in starting and improper running of the motorcycle.*

SAFE RIDING RECOMMENDATIONS

Any two wheeler riding requires some precautions to be taken to ensure the safety of the rider, pillion rider and other road users. These precautions are:

Familiarise yourself with new TVS RTR 160 4V

Riding skill and your mechanical knowledge forms the foundation of safe riding practices. We suggest you to practice riding TVS RTR 160 4V in a low-traffic condition until you are thoroughly familiar with your vehicle and its controls. Remember practice makes you perfect.

Riding apparel

Loose, fancy clothing can be uncomfortable and unsafe when riding a two-wheeler. Choose good quality two wheeler riding apparel.

Know your limits

Ride within the boundaries of your own skill at all times. Knowing these limits and staying within them will help you avoid accidents.

Warning

Two wheeler safety starts with wearing a good quality helmet. *One of the most serious injuries that can happen is a head injury. Always wear an good quality helmet that should fit your head comfortably and securely. You should also have good quality goggles to protect your eyes and help your vision.*

To prevent or minimize accident, never consume alcohol or drugs before or during the operation of your vehicle. Even minimal consumption of these will affect the rider's ability to control the vehicle.

Posture

Proper vehicle riding starts with proper posture.

1. Keep your elbows relaxed and flexible.
2. Sit and adjust yourself on seat so that arms and shoulders are relaxed.
3. Look widely instead of gazing at one point.
4. Keep the knees close to the fuel tank.

Cornering

When cornering, centrifugal force works in a direction perpendicular to the direction in which the vehicle is moving. Centrifugal force increases in proportion with speed and the radius of the corner.

During cornering, reduce speed so as to reduce the effects of centrifugal force. Avoid abrupt application of brake or sudden steering by all means.

⚠ Warning

One-hand riding is dangerous. *Keep both hands firmly on the handle bar and both feet securely on the foot rest. Under no circumstances should both the hands be removed from the handle bar, as it is very dangerous.*

⚠ Warning

Avoid use of mobile phones while riding as it could lead to fatal accident.

Do not downshift the gears in the midst of cornering. Slow down to a safe speed before negotiating a corner. If this is the first time that you are riding a vehicle of this type, we suggest that you practice on a safe, open area to thoroughly familiarise with the operation of the vehicle.

Braking

For safe riding, it is very important to master the braking techniques.

1. Close / release the throttle.
2. Hold the vehicle upright as you apply the brake.
3. Progressive application of brakes is safer.
4. Never depress the clutch lever while braking at higher speeds.
5. **Apply both the brakes.**
6. Riding down hills, while cornering and wet roads close throttle and down shift the gear to take advantage of gearbox and engine which acts as an additional brake. This will avoid the loss of control

over the vehicle due to over speed.

Causes for poor braking

1. If the brake shoes / pads or drum / disc are worn out or if there is water or oil on them, sufficient friction does not develop and brakes do not work well.
2. Even when the brake works normally, if the road surface is wet or the tyre surface is worn-out, tyres do not take a firm hold on the surface, increasing the stopping distance.
3. Approximately 60% braking effect is from front brake. **Non-usage of front brake causes poor braking.**

Warning

As the vehicle speed increases, the stopping distance also increases progressively. Be sure that, you have sufficient distance between you and the vehicle or obstruction ahead of you.

Using only the front or rear brake is dangerous and can cause skidding and loss of control. ***Apply both the brakes together and with great care on a wet road or other slippery surfaces.***

Warning

Any abrupt braking on slippery or irregular roads can cause loss of rider control.

ACCESSORY INSTALLATION AND SAFETY TIPS

Use extreme caution while selecting and installing the accessories for your motorcycle.

The addition of **unsuitable accessories can lead to unsafe operating conditions.** Your friendly Dealer will assist you in selecting quality accessories and installing them correctly.

While selecting the accessories, make sure the accessories **should not obstruct lighting, steering, suspension level and ground clearance.** Please ensure that if the tank cover is used, it is not getting en-trapped between fuel tank and fuel tank cap.

Additional electrical equipments and controls should not exceed the specified electrical system load of the vehicle (capacity of battery and magneto).

EMISSION CONTROL

All the TVS motorcycles are tested in the factory for optimum fuel efficiency and CO levels.

Do not disturb the Carburettor settings as this may lead to higher fuel consumption and also higher CO levels.

If the vehicle needs any adjustments, please consult nearest TVS Motor Company Authorised Distributor or Dealer / Authorised Service Center.

While adequate care is exercised at the factory to ensure that the emissions are within the limits, it is essential for the owner to always maintain the motorcycle in good condition by getting it periodically checked and serviced by TVS Motor Company Authorised Distributor or Dealer / Authorised Service Center so that the emission and fuel consumption levels are maintained as per norms.

Crankcase emission control system

The engine of TVS RTR 160 4V is equipped with a closed crankcase system to prevent discharging crankcase emissions into the atmosphere. Blow-by gas is returned to the combustion chamber through the air cleaner and the carburettor.

Evaporative Emission Control System

The TVS RTR 160 4V is fitted with Evaporative Emission Control System which consists of a canister and associated piping. This system prevents the escape of fuel vapors from the fuel tank.

Warning

If there is any abnormal jerk, startability issue are felt in the vehicle or noise due to sudden escape of gas during opening of fuel tank cap, immediately report to the TVS Motor Company Authorised Distributor or Dealer / Authorised Service Center.

VEHICLE IDENTIFICATION NUMBER

The frame and engine serial numbers are the only means of identifying your vehicle from others of the same model and type. They are also required to assist your Dealer for ordering parts or referring to special information.

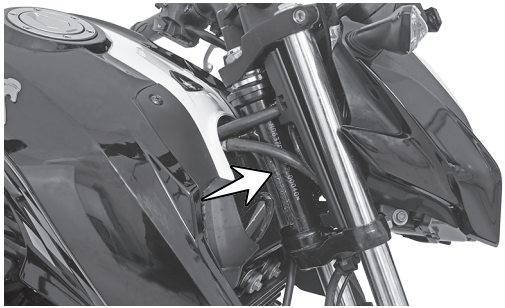

Frame serial number is engraved on the right side of the steering head tube as shown in the above figure.

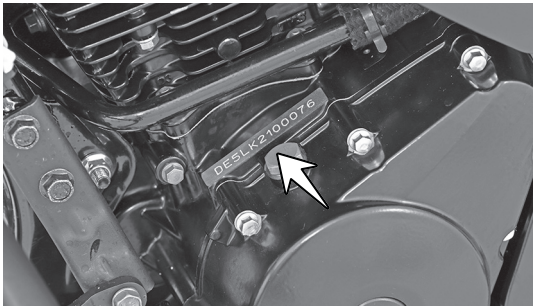

Engine serial number is engraved on the left side crankcase assembly near cylinder block as shown in the above figure.

Frame number

Engine number

Control key number

Please fill the above boxes now for future reference

LOCATION OF PARTS - HANDLE BAR

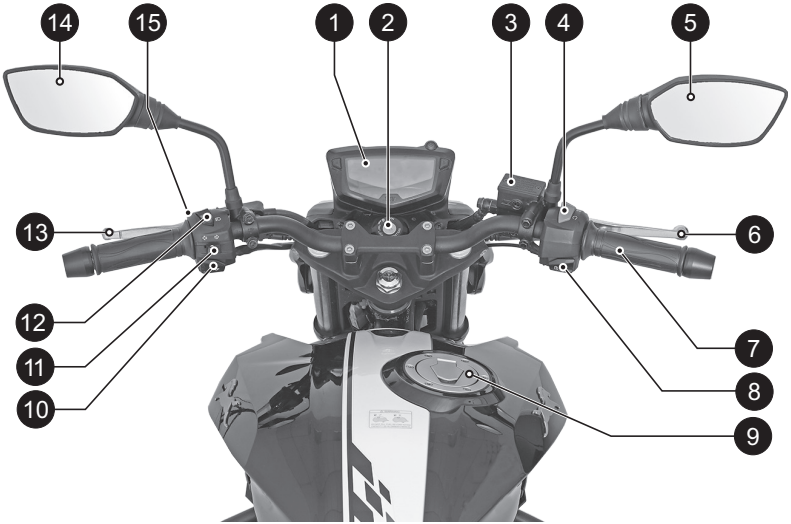

1. Connected instrument cluster
2. Ignition cum steering lock
3. Master cylinder (front)
4. Engine cut off switch
5. Rear view mirror R
6. Front brake lever
7. Throttle grip
8. Electric starter switch
9. Fuel tank cap
10. Horn switch
11. Turn signal lamp switch
12. High / low beam switch
13. Clutch lever
14. Rear view mirror L
15. Pass by switch

LOCATION OF PARTS - VEHICLE LEFT SIDE

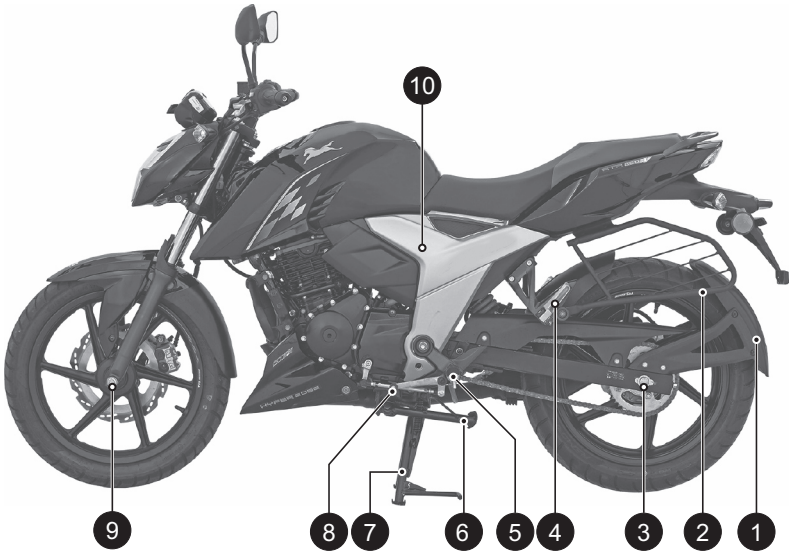

1. Wheel hugger rear
2. Saree guard
3. Rear wheel axle
4. Pillion foot rest L
5. Rider foot rest L
6. Side stand
7. Centre stand
8. Gear shift lever
9. Front wheel axle
10. Cover frame L

LOCATION OF PARTS - VEHICLE RIGHT SIDE

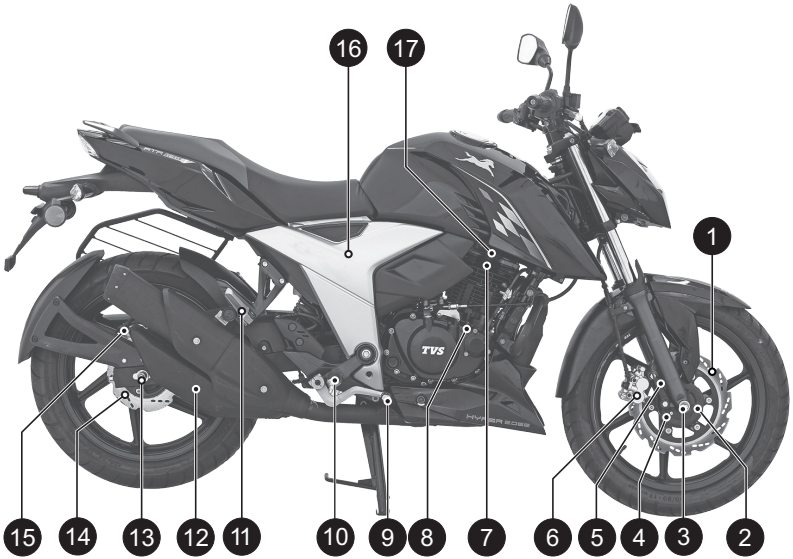

1. Disc plate front
2. Cover toner ring
3. Front wheel axle nut
4. Wheel speed sensor front
5. Toner ring front
6. Caliper assembly front
7. Location of spark plug
8. Gauge oil level
9. Rear brake pedal
10. Rider foot rest R
11. Pillion foot rest R
12. Muffler assembly
13. Rear wheel axle nut
14. Disc plate rear
15. Caliper assembly rear
16. Cover frame R
17. Location of ram air duct

LOCATION OF PARTS - VEHICLE FRONT AND REAR

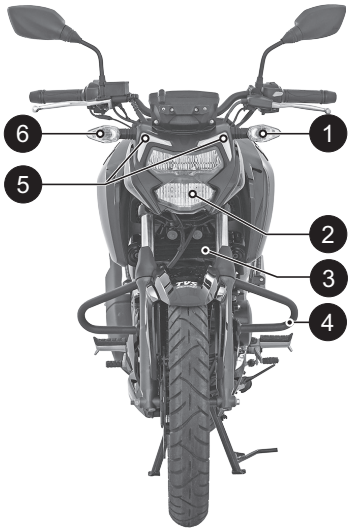

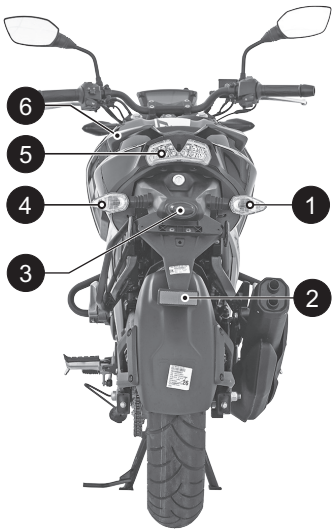

FRONT

1. Turn signal lamp front L
2. Head lamp assembly
3. Oil cooler
4. Crash guard
5. Position lamps
6. Turn signal lamp front R

REAR

1. Turn signal lamp rear R
2. Reflex reflector
3. Number plate lamp
4. Turn signal lamp rear L
5. Tail lamp assembly
6. Pillion handle

CONTROL KEY

Your TVS RTR 160 4V comes with a pair of identical control keys. These keys are to operate ignition cum steering lock, fuel tank cap and seat lock.

IGNITION CUM STEERING LOCK

The ignition switch enables and disables the electrical circuit and steering lock. The three positions of the switch are described below.

1. 'OFF' position

All electrical circuits are deactivated. The key can be removed from the lock.

2. 'ON' position

All electrical circuits are activated. The instrument cluster and warning lights perform self-diagnostic cycle once upon activation.

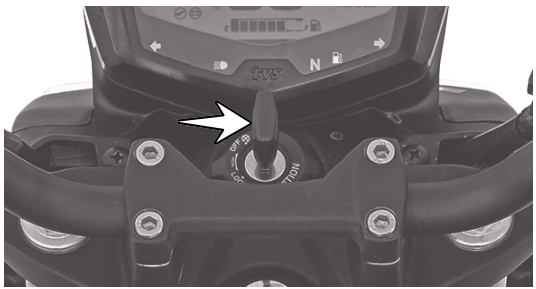

The engine can be started. The key cannot be taken out from the lock.

3. 'LOCK' position

Your TVS RTR 160 4V steering can be locked in both 'left' and 'right' directions.

Turn the handlebar to the 'left' or 'right'. Press the key IN and rotate it to the 'LOCK' position from 'OFF' position. All electrical circuits are deactivated and the steering is locked. The key can be removed from the lock.

Insert the key into the lock and press the key 'IN' and turn it to 'OFF' or 'ON' position to unlock the steering.

Note

Speedometer background illumination and position lamps glow automatically once the ignition key is turned 'ON' without activating other switches.

When the ignition switch is turned 'ON' the speedometer performs self diagnostic cycle. Wait till the message 'RACE ON' appears on the speedo dial.

Warning

Never attempt to move the vehicle when the steering is locked, you may lose balance.

Caution

Leaving the ignition cum steering lock in 'ON' position for a prolonged time will drain the battery when the vehicle is not in use. Switch OFF and take the key out when the vehicle is not in use.

Always lock the steering while parking for safety.

CONNECTED INSTRUMENT CLUSTER

Your TVS RTR 160 4V is provided with a fully digital connected instrument cluster with lots of features and various modes, mobile app for "Smart Phones" and navigation assist etc.

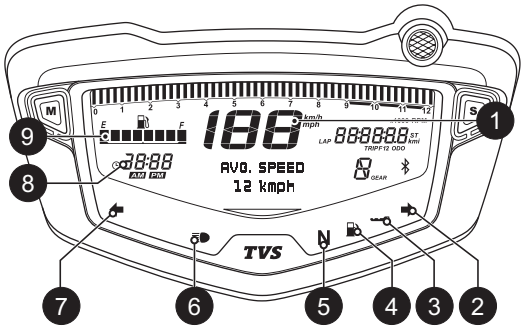

1. Speedometer

Indicates the vehicle speed in kilometer per hour by default whenever the ignition is turn 'ON'. This can be changed to mile per hour. Change the mode between kilometer per hour and mile per hour using the mode and set switch buttons. (Refer Page no. 28 for changing the speed indication between KMPH and MPH).

Note

If you leave the ignition key in 'ON' position and vehicle is kept without moving for more than 3 minutes, an error message 'CHECK SPEED SENSOR' will scrolls which is normal.

If you notice an error message 'CHECK SPEED SENSOR' while the vehicle is in move, Contact nearest TVS Motor Company Authorised Distributor or Dealer / Authorised Service Center for rectification.

2. Turn signal indicator right (➡)
Flashes when the 'right' side turn signal indication is activated.

3. Immobilizer indicator ( )
-NA-

NA - Not applicable for present model

4. Low fuel indication ( )
Blinks when the fuel level reaches to minimum safe fuel level. It glows continuously when the fuel comes below minimum safe level.

5. Neutral indicator lamp (**N**)
Glows when the vehicle is in neutral and goes 'OFF' if the gear is shifted from neutral.

6. High beam indicator lamp ( )
Glows when the head lamp is activated in high beam.

7. Turn signal indicator left (⬅)
Flashes when the 'left' side turn signal indication is activated.

8. Digital clock
Indicates the time in 12 or 24 hour time format as per user's preferred setting. Refer page no. 28 for changing the time format between 12 hour and 24 hour.

Note

If the battery is disconnected and reconnected during service. You may need to reset the time as explained in page no. 28.

9. Fuel gauge
Digital bars indicate the approximate quantity of fuel available in the fuel tank. There are eight bars to indicate the quantity of fuel available in the fuel tank.

All the eight bars will be displayed when the fuel in the tank reaches above 10.5 liters approximately (full tank). When the fuel reaches half tank (6.5 liters approx.) the fuel gauge displays only four bars as shown.

The fuel gauge shows only single bar when the fuel reaches minimum safe fuel level (2.5 liters approx.)

Low fuel indication (serial no. 4) starts blinking and one bar will be visible when the fuel reaches to the minimum safe level 1.8 liters approximately. Refill the fuel immediately. Once the fuel level reaches 1.1 liters approximately, no bar will be visible and low fuel indication (serial no. 4) glows continuously.

If all the fuel level bars in the speedometer are blinking and an error message 'CHECK FUEL SENSOR' scrolls at bottom, Contact nearest TVS Motor Company Authorised Distributor or Dealer / Authorised Service Center.

11. Odometer / Trip meter 1 & 2 / Lap indicator / High speed indicator / Shortest time indicator

The procedure for setting each mode is given in page 26 .

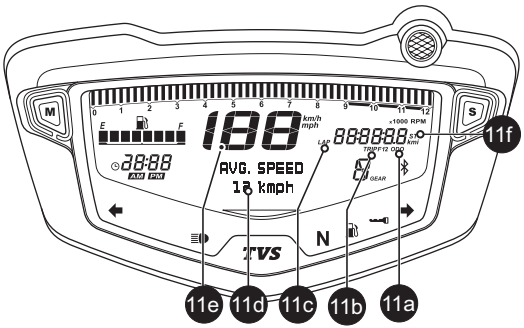

11a. Odometer

Odometer registers the total distance covered by the vehicle in kilometer or mile as per the user's preferred setting. The digit after the dot mark denotes one tenth of a kilometer or mile. Set the meter in 'ODO' mode to know the odometer reading.

11b. Trip meter

In ODO mode, Press mode button once and twice to enter 'TRIP 1' and 'TRIP 2' meters respectively.

Trip meter indicates the trip distance travelled in kilometer or mile (as per the preferred settings). The digit after the dot mark denotes the one tenth of a kilometer or mile.

Provision to measure two different distance 'TRIP 1' or 'TRIP 2' is provided for the users to use as per their convenience.

11c. Lap timer

Lap timer indicates the time taken to complete a particular lap. On entering the lap timer mode, press the 'Info switch (i)' on the handle bar to start a lap timer. The timer starts counting current lap's time and displays in active lap timer as shown (before starting the lap timer, ensure that the timer is reset. Refer page No. 27 for details).

LAP 00:00:15

Press the 'Info switch' again to stop the current lap timer and to start a new lap. Existing lap timings will be displayed as shown below and continue to get updated whenever a new lap is started and stopped. Long press the 'Info switch' for few seconds (more than 1 second and less than 3 seconds) to stop the lap timer count.

LAP1: 00:00:13
LAP2: 00:00:16

To start a lap timer again, after stopping it by pressing the 'Info switch', the lap timer need to be reset as explained page No. 27. You can record any number of laps but last three lap's details only will be displayed in the cluster.

Note

Lap timer works only when the lap timer mode is active. Once the lap timer is stopped by pressing the 'Info switch', the timer cannot be started again until the timer is reset. ***Only last three lap's timing will be displayed in the cluster on entering the lap timer mode.***

11d. Average speed indicator

This is the default mode if the instrument cluster is not connected with your mobile device via 'Bluetooth'. Using 'SET' button this mode can be turned 'ON' if the cluster is connected to you mobile. In this mode the cluster calculates and displays the average running speed of the vehicle.

AVG. SPEED
82 kmph

11e. High speed indicator

High speed indicator records the maximum speed (top speed) achieved by the rider so far either in km/h or mph as per preferred setting. You can reset and record the new speed if required. Refer page no. 27 for resetting the high speed data. On entering th high speed mode previously achieved high speed data will be displayed in the instrument cluster as shown.

Whenever the vehicle speed crosses the previous achieved high speed, a message 'ACHIEVED HIGH SPEED' will be popped-up and a trophy symbol will be flashed to cheer your achievement when the vehicle reaches to a safer low speed.

These pop-ups can be cancelled by pressing the 'Info switch' (i) on the handle bar else it will disappear automatically.

Note

Maximum speed recorded so far will be displayed whenever the meter is set in 'HIGH SPEED' mode. This display will go off automatically once the vehicle starts moving (>1 km/h) and it will continue the normal operation.

Max speed recorded will be stored until manual reset. If the high speed is reset, the speed value will be shown as '0'.

11f. Shortest time indicator

Shortest time indicator records the minimum time taken so far to reach 60 km/h or 40 mph speed (according to the preferred setting).

On entering the shortest time mode, the overall best time achieved so far will be displayed for few seconds as shown.

And the last recorded time will be displayed in the shortest time recorder as given below.

This last recorded time can be reset as explained in page No. 27 and a new time can be recorded if required. The overall best time will be replaced automatically by the next overall best time. On achieving the new overall best time, a message 'ACHIEVED SHORTEST TIME' will be popped-up and a trophy symbol will be flashed to cheer your achievement when the vehicle reaches to a safer low speed.

These pop-ups can be cancelled by pressing the 'Info switch' (i) on the handle bar else it will disappear automatically.

Note

Overall best time achieved so far and the last recorded time to reach 60 km/h or 40 mph speed will be displayed when the ignition is turned 'ON' and the meter is set in 'SHORTEST TIME' mode.

Once the speed reached 60 km/h or 40 mph, then the time will stop at the exact point.

Note

For recording a new time, the last recorded shortest time need to be reset. On resetting time, the value will be reset to 0.0 (but the default value is 9.9 secs.). Overall best time recorded cannot be reset manually. It will be replaced automatically by next overall best time.

12. Shift RPM indicator / 13. Tachometer / 14. Lean angle indicator / 15. Trip F / 16. Gear shift indicator / 17. Service reminder / 18. Low battery indicator

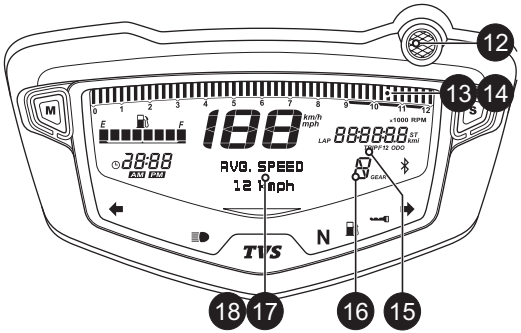

12. Shift RPM indicator

Shift RPM indicator alerts the user to shift the gears when engine reaches the specified RPM. Users can set the RPM indication levels as per their riding convenient in multiples of 1000 up to 12000 RPM (refer page no. 29). When the engine reaches the set RPM, red indicator in the digital speedometer glows and indicates the user to shift to next higher gear.

Note

By default the shift rpm is set to 7000 RPM. You can set it to your convenience as per your riding habit.

Shift RPM indicator does not work when the vehicle is in neutral or when the fifth gear is engaged.

13. Tachometer

Tachometer indicates the engine speed in multiples of 1000 RPM (Revolutions Per Minute).

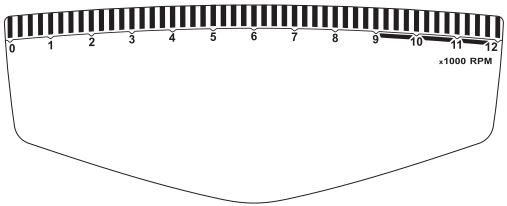

14. Lean angle indicator

When this mode is selected (refer page no. 29), the tachometer indication will indicate the leaning angle information of the vehicle and the same data will be displayed at the bottom of the cluster as shown.

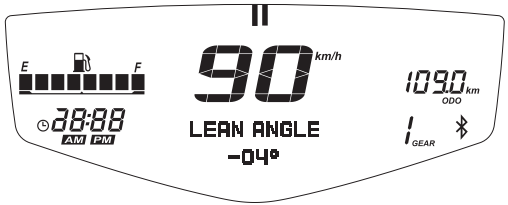

Note

Lean angle is calculated from the mobile device when it is connected to the instrument cluster and lean angle mode is set. ***The accuracy of the lean angle information depend on the mobile device used, orientation and placement of the mobile device on the vehicle****. Refer page No. 31 for detail procedure connecting the mobile with the instrument cluster.*

For best accuracy, it is recommended that the user to mount the phone to a rigid part of the bike in vertical position. ***Lean angle will not be displayed in stationary condition.***

15. Trip F

This function shows the distance travelled when the low fuel indication symbol (⛽) starts blinking and fuel gauge shows only one bar or glows continuously with fuel gauge showing no segment, the display automatically switches to the 'TRIP F' indicator after 0.5 km or 0.3 miles as per preferred settings and 'TRIP F' meter starts counting from 0 km in km/h mode and 0 miles in mph mode.

If the fuel level remains in minimum safe level, the reading is saved even after the ignition key is turned 'OFF'.

The count stops and clears automatically after a certain distance covered when the fuel level rises above minimum safe level. 'TRIP F' meter cannot be activated or deactivated manually.

At every ignition ON, 'TRIP F' meter will get enabled automatically until fuel level is reached above minimum safe level (2.5 L).

16. Gear shift indicator

The gear shift indicator in the digital display indicates the position of the gears.

Note

If you notice an error message 'CHECK GEAR SENSOR', Contact nearest TVS Motor Company Authorised Distributor or Dealer / Authorised Service Center for rectification.

17. Service reminder

If the service is due, whenever the ignition lock is turned 'ON', the following message will be popped-up after the speedometer's self diagnostic cycle and continues to pop-up till the vehicle is serviced and remainder is reset. Get the vehicle serviced at TVS Motor Company Authorised Distributor or Dealer / Authorised Service Center.

Note

Service reminder works only based on the distance (km/miles) covered by the vehicle. This is only a reminder indicator. Customers are advised to keep track and follow the service schedule.

18. Low battery indicator

The following message will be popped-up after the speedometer's self diagnostic cycle when the battery charge is too low. Get the battery checked at TVS Motor Company Authorised Distributor or Dealer / Authorised Service Center.

Note

Service remainder and battery low pop-up can be cancelled by pressing the 'Info switch' (i) on the handle bar.

MODE AND SET BUTTONS

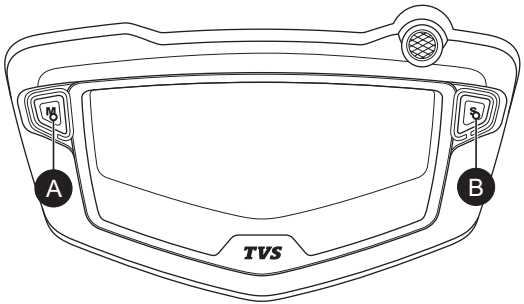

The mode (A) and set (B) buttons are provided to change between various modes and set the some of the digital display functions of the instrument cluster. The sequence of modes and their selections are explained in detail below.

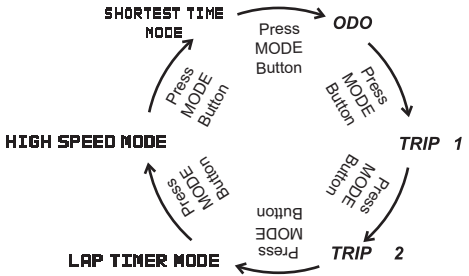

Short press the Mode button to access the following modes:

1. ODO
2. Trip 1
3. Trip 2
4. Lap timer
5. High Speed indicator
6. Shortest time indicator

Note

Above mode changes are possible only when the vehicle is in static condition for safety.

On long pressing the Mode button, the following modes can be accessed.

1. SET mph MODE / SET kmph MODE
2. CLOCK SETTING MODE
3. SHIFT RPM SETTING
4. LEAN ANGLE MODE / RPM MODE
5. BLUETOOTH PARING MODE

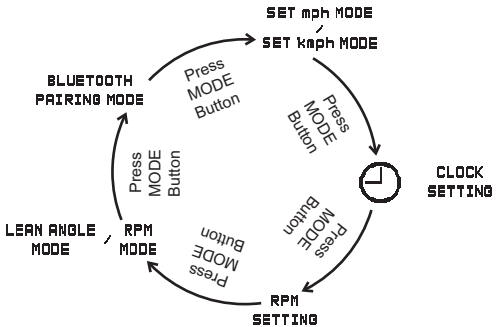

Setting the digital display

Every press of the mode button changes the display to other mode. Follow the below procedures to change the display to desired mode.

If ignition is turned OFF when the meter is in ODO or TRIP meters, then the respective meters will be displayed in the next ignition 'ON'. If any other modes other than these were set during ignition 'OFF', then ***' ODO '*** meter will be displayed in the next ignition 'ON'.

1. In 'ODO' mode, Press the Mode button once and twice to enter ' ***TRIP 1*** ' or ' ***TRIP 2*** ' meters respectively.
   - To reset any of the trip meter while ensuring the display is in 'TRIP 1' or 'TRIP 2', press and hold the set button for a few seconds.
2. In 'TRIP 2' meter mode, Press the 'Mode' button once to enter lap timer mode. On entering the lap timer mode, a message ' LAP TIMER MODE ' and last three laps timing will be displayed in the cluster's display.
   - To reset the timings, keep the display in 'LAP TIMER MODE' and wait till the cluster displays the lap timings. Now press and hold the Set button for a few seconds.
3. In 'TRIP 2' meter mode, press the 'Mode' button twice to enter high speed mode. On entering this mode a message 'HIGH SPEED MODE ' and last achieved high speed data will be displayed in the cluster's display.
   - To reset the high speed recorded, keep the display in 'HIGH SPEED' mode and press the 'Set' button for a few seconds.
4. In 'TRIP 2' meter mode, press the Mode button thrice to enter shortest time mode. On entering this mode, last achieved shortest time ' 9.6 ST ' and overall best time ' 0-60 kmph : 9.2s ' will be displayed in the cluster's display.
   - To reset the last achieved shortest time, keep the display in 'SHORTEST TIME MODE', press and hold the Set button for few a seconds. Please remember only last / current record will be reset and best time display will remain same until new best time is achieved.
5. Press the 'Mode' button once to change the display to 'ODO' mode again.

MPH and KMPH setting

1. Ensure the display is in 'ODO' mode.
2. Press and hold the Mode button for few seconds till the display enters ' SET mph MODE '. Press the Set button to select the MPH mode.
3. To change the display to KMPH mode again, press and hold the Mode button til the display enters ' SET kmph MODE '. Press Set button to select the KMPH mode.

Digital clock setting

1. Ensure the display is in 'ODO' mode.
2. Press and hold the Mode button for few seconds till the display enters 'SET mph MODE' or 'SET kmph MODE' (based on preferred setting).
3. Release and press the Mode button once again so that the display enters ' CLOCK SETTING ' mode.

Note

If the display is set to MPH mode, it will switch to KMPH mode by default whenever the ignition is turned 'OFF' and 'ON'.

4. On pressing the Set button, if the clock is in 12 hours format, the hour format 'AM' or 'PM' blinks. Else the clock will be ready for 24 hours format selection.
5. Press the Mode button to change the hour format 'AM' or 'PM' or to change the clock to 24 hours format.
6. If the clock is in 24 hours format press the Mode button once again to set the clock to 12 hours format.
7. Press the Set button again so that the hours digit of the clock blinks.
8. Now, press the Mode button to increase the hours while hour digits are blinking.
9. On pressing the Set button again the hours of the clock is set and the minute digit blinks.
10. Now, press the Mode button to increase the minutes while minute digits are blinking.
11. Press the 'Set' button once again to set hour format and to come out from clock setting.

Setting the Shift RPM

Ensure the display is in 'ODO' mode.

1. Press and hold the Mode button for few seconds till the display enters 'SET mph MODE' or 'SET kmph MODE' (based on preferred setting).
2. Release and press the 'Mode' button twice so that the display enters ' RPM SETTING ' mode.
3. Press the Set button to enter the shift RPM setting mode.
   - Previous set RPM value will be displayed in the bar display and shift rpm indicator also glows on entering this mode.
4. Now, press the Mode button to increase the RPM (multiples of 1000) in cyclic fashion. Once the user starts updating, the LED stops glowing.
5. Pressing the Set button exits the setting. Once the shift RPM is set, the LED again glows till this mode is exit.

Lean angle mode /RPM mode setting

1. Ensure the display is in 'ODO' mode.
2. Press and hold the Mode button for few seconds till the display enters 'SET mph MODE' or 'SET kmph MODE' (based on preferred setting).
3. Release and press the 'Mode' button thrice so that the display enters ' LEAN ANGLE MODE ' mode if the RPM mode is set.
   - Else it will enter to ' RPM MODE ' mode.
3. Press the Set button to set the 'LEAN ANGLE MODE' or 'RPM MODE'.

Bluetooth pairing mode '

Using the Bluetooth pairing mode the connected instrument cluster of 'TVS RTR 2004V' can be connected to your Android™ smart phones and iPhone® via Bluetooth® through a TVS CONNECT app which can be download from Google Play and the Apple store®.

TVS CONNECT

Note

In lean angle mode all other features of instrument cluster will be accessible except engine rpm.

If the Set button is pressed when the instrument cluster is in normal operating mode like 'ODO', 'TRIP' etc. following information will be popping out which is not applicable to present model.

NEXT SERVICE

-- --- ----

Note

Any number of Android phones can be auto-paired with the instrument cluster.

Only one iPhone can be auto-paired with a single instrument cluster at a time. If the user need to connect multiple iPhones with the single instrument cluster, the previous connected iPhone has to be forgotten by clicking, "Forget This Device" from Bluetooth settings in the iPhone.

If the vehicle battery is reset or fuse is blown, then too "Forget This Device" from Bluetooth settings in the iPhone has to be done.

Steps to "Forget This Device" in iPhone:
If the user needs to connect multiple iPhones with the single instrument cluster, the previous iPhone has to be forgotten using "Forget This Device" from Bluetooth settings in the following manner:

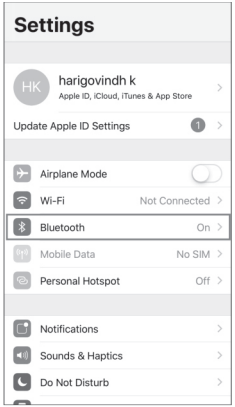

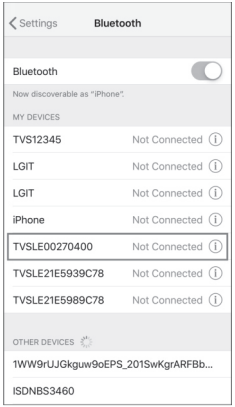

1. In the previous connected iPhone, open the SETTINGS -> BLUETOOTH.
2. Select the instrument cluster, which was connected previously.
3. Click on the "Forget this device".

First time Bluetooth paring:
To pair your Android smart phone or iPhone with your TVS RTR 160 4V motorcycle's connected instrument cluster, via Bluetooth, for the first time, follow the procedure as described below:

1. Ensure the display of the instrument cluster is in 'ODO' mode.
2. Press and hold the Mode button for few seconds till the display enters 'SET mph MODE' or 'SET kmph MODE' (based on preferred setting).
3. Release and press the Mode button four times so that the display enters ' BLUETOOTH PAIRING MODE '.
4. Now, press the Set button to establish the connection with your smart phone.
5. On pressing the Set button the connected instrument cluster checks for the near by available smart phone and displays following message:

NO DEVICE
CONNECTED

Now, just press the 'Connect icon' of the mobile app to establish the connection with the cluster.

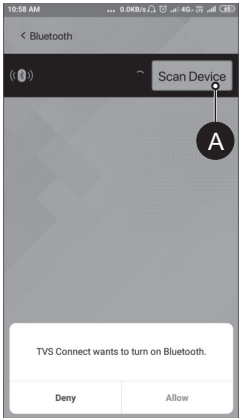

On pressing this icon, the app opens a screen where you will be asked to grant permission to turn 'ON' your smart phone's Bluetooth if it is in 'OFF' condition. Turn 'ON' the Bluetooth. Else, press the 'Scan Device' icon (A) to initiate the search incase the app is not searching automatically. The app searches and lists the available clusters. Just select the listed cluster. The app communicates with the cluster and the cluster generates a pass key.

Enter this pass key in the app screen to complete the connection.

ENTER PASS KEY
123456

Note

For the first time pairing, the connected instrument cluster should be in 'BLUETOOTH PAIRING MODE'.

During the course of pairing process, there is any occurrence of error, the connected instrument cluster should be turned 'OFF' and 'ON', and the application also need to be restarted.

Please remember that, all the smart phones are not compatible for pairing with the TVS RTR 160 4V motorcycle's connected instrument cluster.

During the search of Bluetooth devices in app, if the vehicle connected instrument cluster's Bluetooth device ID is not visible, try for one or two more iterations.

If the phone enters battery saver mode, auto-pairing might not happen. It takes maximum of five minutes for auto-pairing and it can happen in vehicle running or engine at idling or engine off condition.

If the pass key entered wrongly then the instrument cluster displays the following message.

PASS KEY
WRONG

On connecting with the smart phone successfully, the instrument cluster displays the user name which is fetched from the smart phone as shown.

CONNECTED TO
SUNIL

Note

Auto-pairing happens only if the application is locked in the RAM in multitaksing screen of the phone with manufacturer's customised OS (Ex. : MI, Vivo etc.).

In case of Android phones with Android OS version above 8.0 for App to work seamlessly, any battery optimisation setting to be removed in the TVS Connect app and GPS shall be allowed to run in backround in high accuracy mode.

Even if your phone's Bluetooth is already paired to other gadgets like smart watch, health band or helmet, the auto-pairing works with your TVS RTR 160 4V motorcycle's connected instrument cluster.

Note

In Android smart phones, if the Bluetooth is 'ON', and if the app is already paired with the cluster, the app opens automatically and connects with the cluster once the user takes his phone to near by the vehicle and turns 'ON' the ignition (if the auto launch setting of your smart phone is turned 'ON'). This feature can be disabled if required.

Similarly, in Android and IOS smart phones, if the Bluetooth is 'ON', and if the app is already paired with the cluster, when the user opens the app with the ignition turned 'ON', the app connects automatically with the cluster once the user takes his phone to near by the vehicle. (if the auto connect setting of your smart phone is turned 'ON'). This feature can be disabled if required. Auto connect will only work with the last paired mobile phone.

If the application unfortunately stops due to unfrossen circumstances. Close and reopen the application and do the manual pairing for the first time, then auto-pairing will happen subsequently.

For first time pairing, logout from the app, login again with your login credential and press 'Connect' icon.

Customer window

This is the default window when the connected instrument cluster of your 'TVS RTR 160 4V' is connected with your smart phone using Bluetooth ' '.

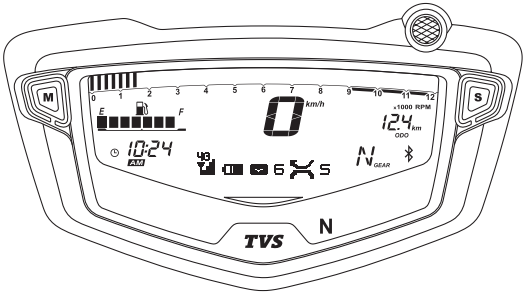

Once the cluster is connected with the smart phone the cluster displays the signal strength of the network provider ' 4G ' and the battery level ' ' of the smart phone. Number of unread messages ' 6 ' and number of missed calls ' 5 '.

Note

Incase multiple SIM cards are used in smart phone, by default, SIM 1's network provider's signal strength is shown in the display of connected instrument cluster.

Signal strength displayed in connected instrument cluster might vary from the display in smart phone as the former is referred from telephonic standards.

Incoming call alert display ( )

The connected instrument cluster will display the incoming calls alerts from the smart phone via Bluetooth. Ex. 'AKASH', will be displayed if the contact is stored in the smart phone otherwise number will be displayed. Ex. '9897712345' **(in IOS only "Incoming call" will be displayed).**

Missed call alert display ‘ ’

The connected instrument cluster displays the total number of missed calls from the smart phone via Bluetooth.

5 MISSED CALLS

SMS alert display ‘ ’

The connected instrument cluster displays the incoming SMS from the smart phone via Bluetooth, Ex. ‘SMS FROM AKASH’, name of the sender will be displayed if it is stored in the smart phone. Else, number will be displayed. Ex. ‘9897712345’ **(applicable only for Android smart phones).**

SMS FROM AKASH

+919897712345

Note

Incoming calls, missed calls and SMS alerts can be cancelled by pressing the ‘Info switch’ (i) on the handle bar ***(in IOS, pressing the switch only clears the notification but the call will not be cancelled in the phone).***

Navigation window

Once the navigation assist is turned ‘ON’, the display of your TVS RTR 160 4V motorcycle’s connected instrument cluster enters into navigation window and displays the turn by turn navigation instruction with a simple and elegant graphical representation.

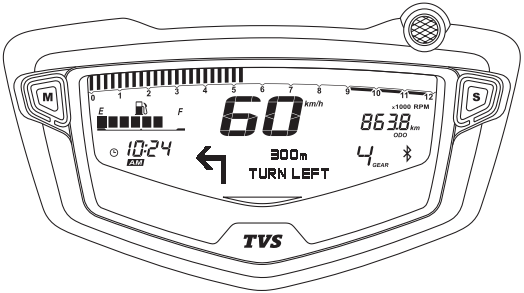

Note

Please remember that the Navigation License has to be renewed after 5 years of vehicle purchase and renewal can be done by contacting near by Distributor or Dealer end.

Low fuel alert

When the fuel level in the vehicle reached below reserve level, the app sends a low fuel alert to the connected instrument cluster to give notification of the fuel level. The same alert will be also shown in the app.

Low fuel assist

When the fuel level is low, the app sends a fuel assist message to the instrument cluster. You can either accept or reject the assist request.

If you accept the request (by pressing the 'Info switch' on handle bar for about 3 secs.) the app will automatically provide navigation to the nearest fuel pump.

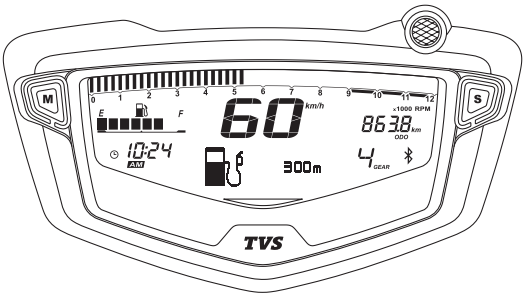

The customer also can chose to reject the request (by pressing the 'Info switch' on the handle bar for about 1 sec.). In which case, the previous display will remain.

Nearest location alert

Nearest location window of the connected instrument cluster alerts you with the nearest fuel location, when the fuel level of the vehicle drops to reserve level ie. when the low fuel lamp starts blinking.

You can either accept the request and navigate to the nearest fuel station or reject the request using 'Info switch' on the handle bar.

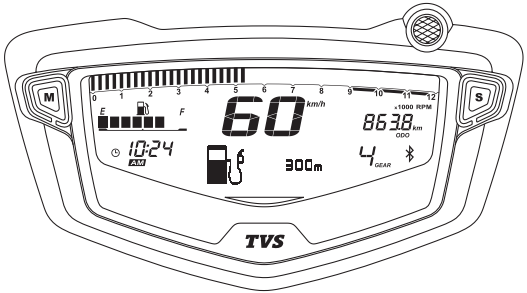

Crash alert

Based the smart phone's accelerometer data, crash alert will be detected by smart phone and the same will be transferred to connected instrument cluster. Any button connected to the instrument cluster such as Mode & Set button and 'Info switch' will cancel crash alert and no other alerts will be active at this time.

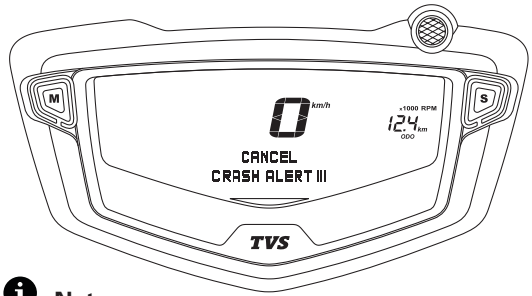

Note

Presently the crash alert is detected from the smart phone. Hence the accuracy of the same depends of the placement of the smart phone on the vehicle and the status of connection of the phone to the vehicle. For best accuracy, it is recommended that the user mounts the phone to a rigid part of the bike.

If alert is not cancelled within 180 seconds, a message will be sent to Emergency Contacts with location details.

Clock auto sync

Whenever the app is connected to the connected instrument cluster the clock of instrument cluster gets synchronised with the clock of the phone.

G-force measurement

G-force measurement provides an approximate G-force measure wherein the vehicle is operated. The G-force is measured during both acceleration and deceleration of the vehicle.

Note

The G-force is measured based on the vehicle speed andnot with an on-board measurement unit. So there might be a variation between the actual and the measured values. The G-force value displayed is only an estimate of the actual value.

TVS CONNECT APP

Dedicated smart phone app is available in the Google Play and the Apple store for your 'TVS RTR 160 4V' and it can be installed in your Android smart phones and iPhones. To access the features of your TVS RTR 160 4V's connected instrument cluster like :

1. Incoming call alerts in connected instrument cluster.
2. Incoming SMS alerts in connected instrument cluster (applicable only for Android smart phones).
3. Number of missed call alerts in connected instrument cluster.
4. Battery status of your smart phone in connected instrument cluster.
5. To send auto reply SMS to the callers via smart phone (applicable only for Android smart phones).
6. "Do Not Disturb" mode during the ride (applicable only for Android smart phones).
7. To send navigational assist instructions inputs to the connected instrument cluster from your smart phone.
8. To save the last traveled route.
9. To locate the last parked location of your TVS RTR 160 4V.
10. To know the signal strength of your mobile network in connected instrument cluster.
11. To generate and store Ride reports.
12. To sync the connected instrument cluster clock with smart phone clock.

This dedicated mobile app of your 'TVS RTR 160 4V' can be downloaded from the Google Play and the App Store® by searching the key word **'TVS CONNECT - (country name)'.**

Note

This smart phone app is compatible only for the smart phones with Android OS version Kitkat (4.4) and above, iOS version 11 and above and the BLUETOOTH version 4.0 and above. ***Android and Google Play are trademarks of Google LLC. App Store® and iOS are trademark of Apple.***

How to login

On opening the **TVS CONNECT** app the following introductory screens will be displayed.

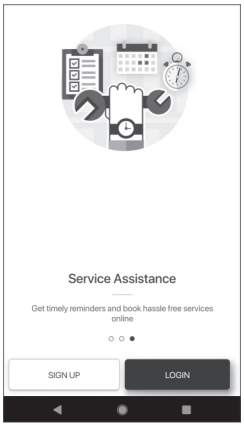

Move to the last screen where you will find the 'SIGN UP' and 'LOGIN' tab. If you are having login already then press login tab. A screen with various login options opens-up as shown.

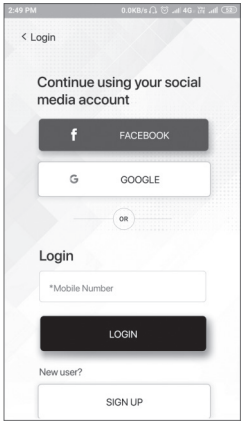

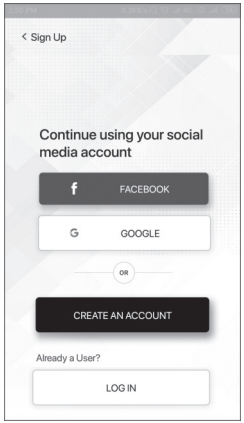

You can login using your social media logins like FACEBOOK and GOOGLE+ or using your mobile number which has been registered already.

If you are a new user then press the sign up tab where you will find various options for registering using your social media logins like FACBOOK and GOOGLE+ or a tab for creating new account.

Using your social media logins you can create new login else press the 'CREATE AN ACCOUNT' tab.

On pressing the 'CREATE AN ACCOUNT' tab, a screen opens with various input details. Feed in your details and submit. On submitting the details a screen opens with one time password (OTP) entry.

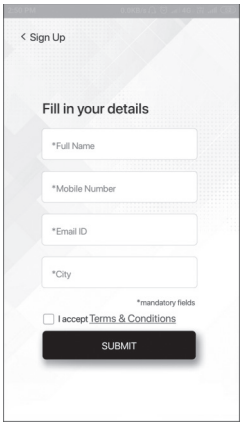

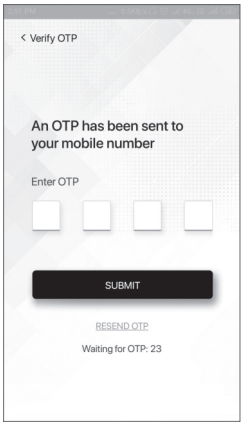

Enter the OTP which is received from TVS Motor Company Limited sent to the registered email id and submit.

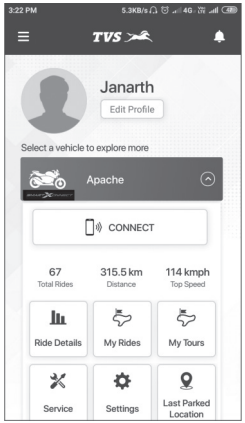

After successful verification, the Home screen of the app opens.

Note

Please remember that the Navigation License has to be renewed after 5 years of vehicle purchase and renewal can be done by contacting near by Dealer end.

Add vehicle

Add vehicle tab allows you to add any of your TVS bikes by selecting the vehicle variant, then press the add vehicle tab.

COOLING SYSTEM

TVS RTR 160 4V is designed with an external oil cooler with stone guard arrangement for optimal engine cooling.

The oil cooler is mounted in front of the engine which improves the engine durability and provides better heat management without any compromising the engine performance.

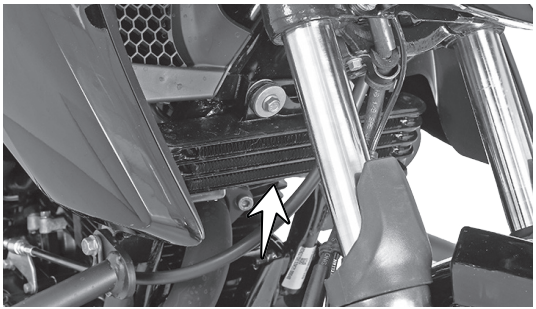

RAM AIR DUCT

TVS RTR 160 4V is designed with a ram air duct on the right side of the fuel tank. This ram air duct throws air exactly above the spark plug while the vehicle in move.

The air thrown above the spark plug cools the plug and maintains its temperature in optimum level. Which in-turn results in better heat management without any compromise on the engine performance and improves the engine's durability.

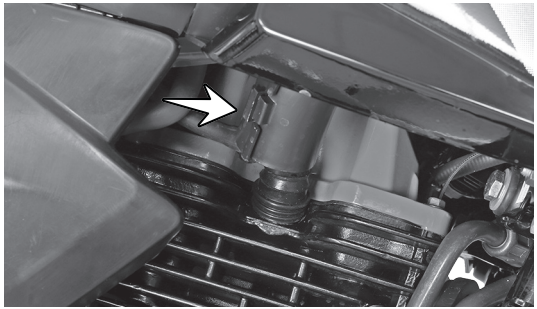

LED HEAD LAMP

TVS RTR 160 4V comes with a LED head lamp which glows automatically once the ignition is turned 'ON'.

Only the head lamp beam (high/low) can be controlled by pressing the high/low beam switch.

HANDLE BAR LEFT SIDE

1. Info switch

Info switch ' i ' is used to cancel certain functions and to start anad stop the 'LAP' etc. Press the switch for particular action.

2. Horn switch

Press the switch ( ) to blow horn. It is used to attract the attention of other road users in case of danger.

3. Turn signal lamp switch

When the turn signal switch is moved to left ' ⇦ ' or right ' ⇨ ', the corresponding turn signal lamps flashes. To stop flashing, push the switch in.

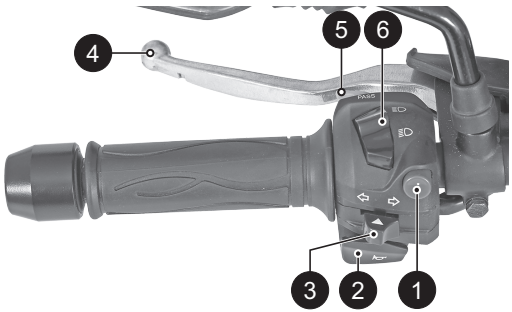

Warning

Failure to switch the turn signal lamp ON or OFF at the right time may lead to an accident.

4. Clutch lever

Press the lever towards grip to disengage the drive. It is used to disengage the clutch while shifting the gears.

5. Pass-by switch

Press the switch to flash the head lamp. It is used to give signal to vehicles coming from the opposite direction while overtaking other vehicles during day.

The head lamp glows automatically once the engine is started. If the head lamp is glowing in 'Low' beam, on pressing the switch, the head lamp 'High' beam also glows along with the 'Low' beam.

If the head lamp is already glowing in 'High' beam, the pass-by system will not work.

Note

Pass by system will not work if the head lamp is glowing in High beam

5. Head lamp high / low beam switch

The head lamp glows automatically once the engine is started. Only the head lamp beam (high/low) can be controlled with the beam control switch.

Press the top end of switch for 'High' beam ' ' and bottom end for ' Low' beam ' ' .

Warning

Use appropriate head lamp beam 'high / low' as per the traffic and road conditions for your safety and avoid inconvenience to other riders.

It is strongly recommended to ride thevehicle in 'low' beam during day.

Note

Once the engine is started the head lamp glows automatically. Only head lamp beam (high/low) can be controlled using beam control switch.

HANDLE BAR RIGHT SIDE

1. Electric starter switch

Ensure the transmission is in neutral or else press the clutch lever before engaging the electric starter switch ' '.

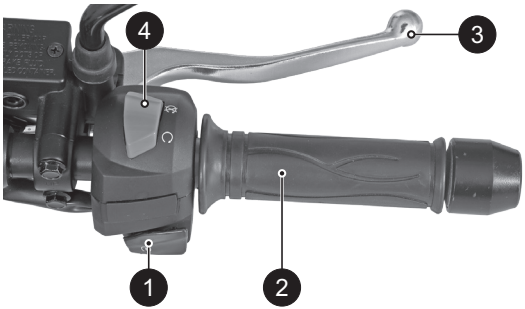

Note

Ensure to turn ON the engine cut-off switch before starting the vehicle.

Release the electric starter switch immediately after pressing.

2. Throttle grip

It controls the fuel-air mixture supplied to the engine, which regulates the engine speed. Rotate the throttle grip in counter-clockwise from its idle position to increase the engine speed and vice-versa to reduce.

3. Front brake lever

It controls a hydraulic unit that operates the front braking system. The front brake is applied by pressing the front brake lever gently towards the grip. The brake lamp glows on application of front brake.

4. Engine cut off switch

It is used to switch off ' ⊗ ' the engine but to keep other DC system active. The ignition circuit is disabled, preventing the engine from being restarted. To restart the engine, return the switch to the ' ◯ ' position.

FUEL TANK* CAP

Flush type fuel tank cap (1) is provided in TVS RTR 160 4V. To open the fuel tank cap, lift the protection lid (2), insert the control key into the lock and turn it in clockwise and lift the cap. Press the cap back to close. Rotate the key anti-clockwise, take out the key and close the lid.

To avoid accumulation of water in the fuel tank, a small drain hole and a pipe is provided in the fuel tank lid cavity so that the water entering through the lid is drained out through a hose.

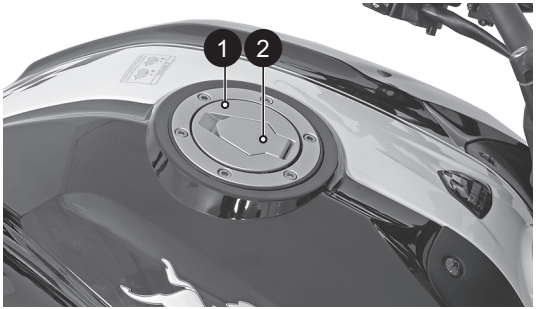

** The fuel tank is not a measuring instrument and the capacity of the fuel tank may slightly vary from the indicated capacity.*

Warning

Do not smoke while refueling. Do not use cell phones while refueling. Avoid spilling of fuel on the hot engine. Refill petrol in well ventilated area. Switch off the engine while refueling as petrol is highly inflammable. After refilling close the cap properly.

EVAPORATIVE EMISSION CONTROL SYSTEM

This vehicle is fitted with Evaporative Emission Control System (EVAP). If there is any abnormal jerk, startability issue are felt in the vehicle or noise due to sudden escape of gas during opening of fuel tank cap, immediately report to the TVS Motor Company Authorised Distributor or Dealer / Authorised Service Center.

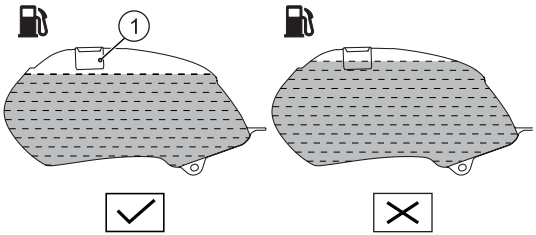

Caution

Never fill fuel beyond the fuel tank inlet (1). *Filling above the inlet may result in improper breathing of fuel tank which leads to difficulty in starting as well as improper running of the vehicle.*

Whenever refueling the bike fill only the recommended quantity of fuel (10 liters).

Do not clean the vehicle by laying down on floor, to avoid fuel entry into EVAP system.

FUEL COCK

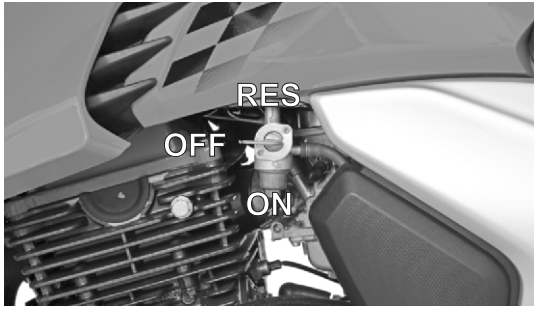

Fuel cock is located on fuel tank at the left side of the vehicle. Fuel cock has the following three positions,

- ON : When the fuel cock is in ON position, fuel will flow from the fuel tank to the carburettor.
- RES : When the fuel cock is in RES position, fuel will flow from the reserve fuel supply of the tank to the carburettor. It is advised to use the reserve fuel only when the fuel is not flowing in ON position.
- OFF : When the fuel cock is in OFF position, fuel does not flow from fuel tank to carburettor.

Warning

Before riding the bike, it is necessary to understand how to operate fuel cock to avoid sudden stoppage of the vehicle in traffic, due to no fuel supply.

Note

Leaving the fuel cock in ON or RESERVE position when the vehicle is not in use may cause the fuel tank to completely drain out, incase of any malfunctioning of carburettor float system. Whenever the motorcycle is not in use ensure to turn OFF fuel cock.

Do not position the fuel cock lever between ON and OFF position as this may drain off entire fuel while riding the vehicle.

CHOKE LEVER

Choke lever ( ) is fixed at the carburettor assembly itself. Gently pull the choke knob outwards for operation.

During cold start, apply the choke and start the vehicle without opening/with less opening of throttle.

Choke lever should be pushed back to its original position when the engine idle rpm is stable.

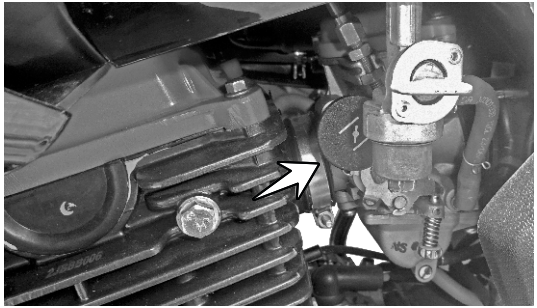

Caution

Always use choke for starting the cold engine. Never open the throttle fully when the choke is applied. It may result in fuel flooding in intake pipe of engine and difficulty in starting.

If the choke knob remains ON, it may result in fuel flooding in intake pipe of engine and high fuel consumption.

KICK STARTER LEVER

The kick starter lever is located on the right side of the vehicle. To start the vehicle, keep the ignition and engine cut off switch in 'ON' condition. With the transmission in neutral, keep your foot on the lever extension and kick from top and stroke to bottom with rapid motion.

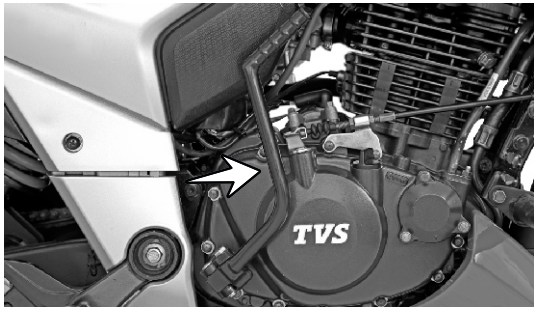

Note

It is recommended to start the vehicle always in neutral gear. However, the vehicle can be started in any gear after depressing the clutch lever.

GEAR SHIFT LEVER

TVS RTR 160 4V is equipped with a 5 speed constant mesh transmission.

Neutral (N) position of the transmission is indicated by the warning light on the speedometer.

To shift the transmission from neutral to first gear, push the gear shift lever down.

To change it to the second gear, lift the lever up. Lifting the lever up repeatedly engages all the gears in succession up to the fifth gear.

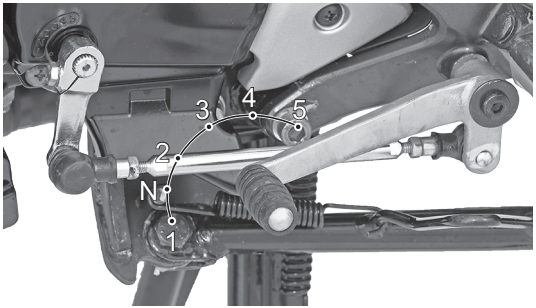

Caution

Never shift gears without disengaging the clutch and releasing the throttle. Failure to comply this will lead to rough shift or jerk while shifting the gears. Remember to return to neutral position before restarting the engine.

Note

Gear shift lever position can be set to your convenience. Contact your TVS Motor Company Authorised Distributor or Dealer / Authorised Service Center for setting the gear shift lever position.

REAR BRAKE PEDAL

The rear brake pedal is located adjacent to the right foot rest. To control speed of your vehicle close the throttle completely, and gradually press the brake pedal down wards.

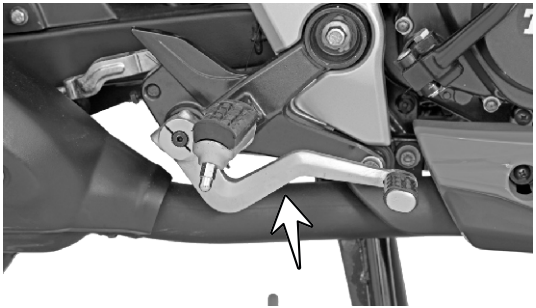

Note

Rear brake pedal position can be set to your convenience. Contact your TVS Motor Company Authorised Distributor or Dealer / Authorised Service Center for setting the brake pedal position.

Caution

Independent use of rear or front brake reduces the overall braking efficiency. In extreme conditions braking with only rear or front brake may lock the wheel which would result in skidding or toppling of vehicle.

Braking performance is affected adversely with wet surfaces, loose surfaces and overheated brakes system due to unnecessary continuous application of brakes. For safety, exercise extreme caution while braking and also at turning. Do not accelerate while turning.

STANDS

TVS RTR 160 4V is equipped with a centre (1) and side stand (2). To place the vehicle on the centre stand, hold the handle bar left grip with left hand and pillion handle with right hand.

Place your foot firmly on the centre stand extension (1a) and press with adequate effort. Ensure both the legs of centre stand are touching the ground before placing the vehicle on the stand.

Side stand can be operated by sitting on the vehicle with your left foot by pushing it away from the vehicle to its extreme end.

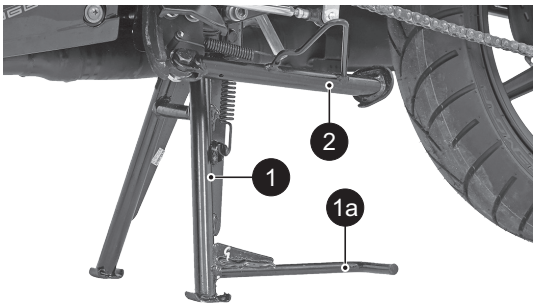

Caution

Do not sit on the vehicle when it is parked on the side stand / centre stand, as your full weight would rest on the vehicle's only support.

Warning

Park the motorcycle safely on a solid ground. On slopes, engage the first gear and park the vehicle in such a way that the front wheel faces uphill. Always release the side stand to its full up position before moving the vehicle.

SEAT ASSEMBLY

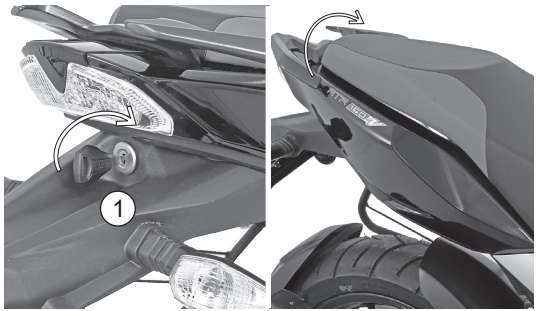

The seat lock (1) is located at the rear end of the vehicle bellow the tail lamp assembly.

Seat removal

To remove the seat assembly, insert the ignition key into the seat lock and turn it in clockwise direction.

Pull and take out the seat assembly by lifting it from the rear end and gently tapping it on the front end.

Seat re-assembly

Locate the seat assembly into the frame. Push it little foreword and press at rear end till you hear the 'click' sound.

Caution

Make sure that the seat is locked securely in position after reassembly.

TOOL KIT

To assist you in performing certain aspects of periodic maintenance and emergency repairs, a tool kit is supplied along with the vehicle.

A tool kit is located under the seat assembly. To access the tool kit, remove the seat assembly as explained in the previous page.

Tool kit consists of one number each of the following.

1. Grip driver
2. Bit (+) (-)
3. 12 x 14 open end spanner
4. Tool bag

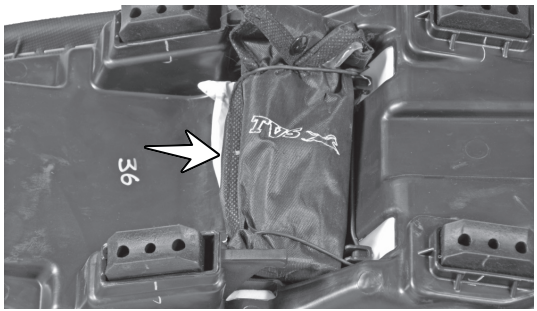

Warning

Do not remove the tool kit from the vehicle. Always ensure to keep it along with the vehicle.

Caution

It is recommended to use the tool kit in case of any emergency only. It is always advisable to take your vehicle to TVS Motor Company Authorised Distributor or Dealer / Authorised Service Center.

COVER FRAME R

Removal

Cover frame R is provided to access the battery and rear disc brake master cylinder. This cover can be opened in the following manner:

1. Remove the seat as explained in page no. 52.
2. Remove the mounting screws (1), (2), (3) from the locations shown in the figure.

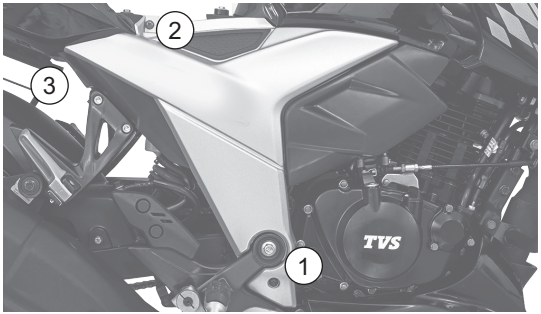

Caution

Make sure that the cover frame is locked securely in position after installation.

3. Dislocate the cover frame lugs from its locations by gently tapping it and take out the cover frame.

Re-install

Locate the lugs of the cover frame at the holes provided on the frame while ensuring the availability of cushions and install the mounting screws.

INSPECTION BEFORE RIDING

Check the following items before riding.

ITEM	WHAT TO CHECK FOR
Engine cum transmission oil	Availability of oil upto the level (page no. 65)
Fuel	Enough fuel for the planned distance of running
Tyres	Correct pressure (page no. 72) Adequate tread depth / No cracks or cuts
Battery	Proper working of all lamps, horn and pass by switch. Low battery indication Battery charge (page no. 62)
Speedometer	Performing self-check
Steering	Smooth movement / No play or looseness
Throttle	Correct free play of cable / Smooth operation
Clutch	Correct free play of cable (page no. 64) / Smooth and progressive action
Brakes	Availability of brake fluid and proper working of brake (page no. 68)
Wheels	Free rotation
Drive chain	Slackness and lubrication of chain (page no. 73)

STARTING THE ENGINE

As you turn the ignition switch to the 'ON' position, the instrument cluster and the warning lights will go through the self-diagnostic cycle. During this phase, make sure that all the warning lights on the cluster comes on.

Turn the fuel cock lever to 'ON' or 'Reserve' position based on the availability of fuel in the tank.

The following conditions must be verified before starting the engine.

- The engine cut off switch is in '◯' position.
- The gear is in neutral.
- If gears are engaged, the clutch lever is pulled.

Press the start button without applying the throttle or with minimal throttle. As soon as the engine starts, release the start button.

When the engine is cold

- Apply the choke and start the vehicle without applying the throttle or with minimal throttle.
- Choke knob should be turned back to its original position when the engine is started and running stable (when the engine is warm / hot do not use choke).

Note

To start the vehicle first time in the morning or after a long duration of storage, for smooth and quick start, choke operation is advised.

To ensure the maximum life of the engine, never speed up at full throttle when the engine is cold.

Caution

Do not keep the engine in idling rpm for long and do not open excessive throttle when the vehicle is parked. It leads to overheating of engine and damage to the internal components.

SETTING THE VEHICLE IN MOTION

1. Depress the clutch lever and engage first gear by pressing the gearshift lever down.
2. Open the throttle slowly and simultaneously release the clutch lever gently and gradually. The vehicle starts moving forward.
3. As the vehicle picks up speed, shift to the next higher gear by closing the throttle, applying the clutch and lifting the gear shift lever up.
4. Release the clutch lever and open the throttle smoothly. Select the required gears in a similar manner.

Using the transmission

The transmission is provided to keep the engine to run smoothly in its normal operating speed range.

The gear ratios have been carefully chosen to meet the characteristics of the engine.

The rider should always select the most suitable gear to achieve the necessary speed and pulling power smoothly.

Riding on hills/gradients

When climbing steep hills, the motorcycle may begin to slow down and show lack of power. At this point the rider should shift to a lower gear so that the engine will again be operating in its normal power range. Shift gears rapidly to prevent the motorcycle from losing momentum.

When riding down a hill, the engine may be used as brake by shifting to a lower gear.

STOPPING AND PARKING

1. Close the throttle completely and apply both the brakes simultaneously.
2. Down shift the gears with clutch lever pressed / disengaged as the road speed decreases. Bring the engine to neutral position just before the vehicle stops.
3. Turn the ignition 'OFF'.
4. Park the vehicle on a firm, flat surface.
5. Lock the steering and turn 'OFF' the fuel cock.

Warning

Reduce speed to a safe limit before turning/cornering. Do not apply brake while turning/cornering. Do not disengage clutch before braking.

Warning

Since the engine and exhaust system becomes very hot, make sure to park the vehicle in a place where pedestrians or children are not likely to touch the hot surface. Do not park near dry grass or any other flammable resources which might catch fire.

To avoid deterioration of paint gloss due to ultra violet rays and heat of sunlight, always park your motorcycle in a covered parking.

FUEL RECOMMENDATION

Use Unleaded petrol only.

The petrol should be minimum 91 RON. Use recommended fuel additives for longer life of engine components and lower maintenance. Petrol mixed with ethanol will have impact on engine components. Contact your TVS Motor Company Authorised Distributor or Dealer / Authorised Service Center for usage.

Caution

Never mix oil and petrol in the fuel tank. Always fill fuel from reputed and reliable fuel stations.

Note

Use fuel additives in petrol as recommended by the respective manufacturer for low carbon deposition.

CHECKS AND TIPS FOR IMPROVING FUEL ECONOMY

Regular checks

Carry out the periodic maintenance checks as specified in this manual (refer page no. 62).

Regular maintenance checks will save fuel ensuring trouble-free, enjoyable and safe riding besides keeping the environment clean .

Spark plug

A dirty or defective spark plug leads to wastage of fuel due to incomplete combustion. Inspect and clean the spark plug if necessary. Visually inspect the spark plug gap. If the gap is found more replace the plug with a new one.

Caution

Do not remove the spark plug when the engine is hot.

Please ensure that the ram air duct is not getting damaged during removal / reassembly of spark plug.

However the spark plug need to be replaced every 12000 kms (1 year). Always use recommended spark plug only.

Air cleaner element

A dirty air cleaner element restricts airflow and increases fuel consumption. Replace the element every 12000 kms.

Since paper filter is used in your motorcycle, it is not advised to clean the filter. Replace the filter in case of any abnormalities.

Clutch

Increase in engine speed during acceleration and constant speed running, without increase in vehicle speed indicates clutch slip. The slipping clutch will cause high fuel consumption, poor acceleration and overheating of engine.

If the condition persists even after adjusting the clutch lever play, immediately have the clutch checked by TVS Motor Company Authorised Distributor or Dealer / Authorised Service Center.

Caution

Never drive the vehicle with the clutch lever pressed. This will reduce the life of clutch and affect the vehicle performance and fuel economy.

Engine cum transmission oil

Dirty or less engine cum transmission oil increases the friction between various parts of the engine and reduces the engine life, thereby increases fuel consumption.

Regularly inspect the engine cum transmission oil for correct level and top-up if necessary. Get it replaced at regular intervals as per the maintenance schedule. Always use TVS TRU4 FULLY SYNTHETIC oil only (SAE 10W 30 API-SL, JASO MA2).

Fuel leak

Check and arrest fuel leak if any from tank, carburettor and fuel lines. Loss of fuel due to leak will drain the fuel tank completely.

Tyres

Low tyre pressure has adverse effects on the vehicle. The drag on the vehicle increases resulting decreased fuel economy. Further more, handling may be affected adversely.

Check the tyre pressure regularly (weekly) and inflate them to the recommended pressure (refer page no. 76). Never use tyres which are worn out beyond the permissible limit.

Chain slackness

Check and ensure drive chain slackness. Excess slackness leads to higher fuel consumption (refer page no. 73).

Wheels free movement

Check and ensure the free movement of wheels by rotating the them at least once in a week to avoid wastage of fuel.

Fast starting from rest wastes fuel

A racing start from rest at full throttle will waste fuel and damage the engine. It also creates a potentially dangerous traffic situation. Fuel is wasted whenever the rider suddenly accelerate or apply brake.

Avoid unnecessary idling

While waiting for someone or stopping in signals for long time, if the engine is kept running at idle speed, it causes unnecessary wastage of fuel.

Avoid frequent braking

Anticipate corners and slopes as well as the traffic conditions. Unnecessary and frequent braking reduces the fuel economy.

Note

Please note that the on-road mileage of TVS RTR 160 4V is dependent on several factors like road condition, quality of fuel, riding speed, operation of clutch and brake, tyre inflation, maintenance / timely servicing of vehicle, load etc. and hence will differ from the mileage given under standard test conditions.

MAINTENANCE SCHEDULE

The maintenance schedule indicates the intervals between periodic services. At the end of each interval, be sure to inspect, check, replace, adjust, lubricate and service as instructed. If the maintenance is not done periodically, it will result in rapid wear and severe damage to the vehicle. If the vehicle is used under high stress conditions such as continuous full throttle operation or is operated in dusty area, certain jobs should be performed more often to ensure reliability of the vehicle. Cylinder head, steering components, suspension, chain and wheel components etc., are key items and require very special and careful servicing. TVS Motor Company Limited strongly recommends that the jobs as per the maintenance schedule be performed by your TVS Motor Company Authorised Distributor or Dealer / Authorised Service Center.

Periodic inspections may reveal one or more parts that may need replacement. Whenever replacing parts on TVS RTR 160 4V, it is recommended that you use only the TVS Motor Company Genuine parts.

Caution

Proper running-in and maintenance are mandatory for making certain that your vehicle is reliable and gives optimum performance at all times. Make sure that the periodic maintenance is performed thoroughly in accordance with the instructions given in this owner's manual.

In more dusty areas, the air filter element requires early replacement than the mentioned kilometers to avoid costly damages to the engine.

PERIODIC MAINTENANCE SCHEDULE (months or km whichever occurs earlier)

Item	Service							Remarks
Service km Period from the date of sale	1st 500-750 1 month	2nd 2500-3000 3 months	3rd 5000-6000 6 months	4th 8500-9000 9 months	5th 11500-12000 12 months	Every 3000 km	Every 6000 km	
Engine cum transmission oil	R	I&T	R	I&T	R	I&T	R	
Oil filter (strainer)	C	–	C	–	C	–	C	
Oil filter (paper filter)	R	–	R	–	R	–	R	
Spark plug	I & C	–	–	–	R	–	–	Replace every 12000 km
Air cleaner element	I	–	–	–	R	–	–	Replace every 12000 km
SAI hose connections	I	–	–	–	–	–	–	
Carburettor assembly	C & A	–	–	–	C & A	–	–	C & A every 12000 km
Tappet clearance	I & A	–	I & A	–	I & A	–	I & A	
Oil cooler fins	–	–	I & C	I & C	I & C	I & C	–	
Oil cooler pipes	–	I	I	I	I	I	–	Inspect & replace if required every 15000 km
Clutch plates	–	–	–	–	–	–	–	Inspect & replace if required every 21000 km
Engine breather hose	I	I	I	I	I	I	–	Replace every 21000 km if required
Carburetor rubber ducts	–	I	I	I	I	I	–	Replace every 21000 km if required
Fuel cock sediment bowl	C	C	C	C	C	C	–	
Hose fuel with respective clamps	I	I	I	I	I	I	–	Replace every two years or 21000 km
Clutch and throttle cable play[1]	I, A & L	I, A & L	I, A & L	I, A & L	I, A & L	I, A & L	–	

[1]Inspect for proper operation and adjust play. Lubricate ends using grease.

Item Service km Period from the date of sale	Service							Remarks
	1st 500-750 1 month	2nd 2500-3000 3 months	3rd 5000-6000 6 months	4th 8500-9000 9 months	5th 11500-12000 12 months	Every 3000 km	Every 6000 km	
Throttle grip	–	–	L	–	L	–	L	Lubricate using grease
Choke operation	I	I	I	I	I	I	–	
Steering smooth operation/play[2]	I & A	–	–	–	C, L & A	–	–	C & L with fresh Bechem premium grade 3 grease every 12000 km
Front fork oil	–	–	–	–	–	–	–	Replace every 18000 km
Front and rear suspension[3]	I	I	I	I	I	I	–	
All fasteners	I & TI	I & TI	I & TI	I & TI	I & TI	I & TI	–	Tighten if necessary
Drive chain**	C, L & A	C, L & A	C, L & A	C, L & A	C, L & A	C, L & A	–	Adjust if necessary
All bulbs, horn and switches	I	I	I	I	I	I	–	Inspect for proper functioning
Head lamp beam	I & A	I & A	I & A	I & A	I & A	I & A	–	
Battery voltage[4]	I	I	I	I	I	I	–	
Brake effectiveness	I	I	I	I	I	I	–	
Brake pedal shaft	L	L	L	L	L	L	–	Lubricate using TRU4 oil
Brake shoe[#] / pad wear	I	I	I	I	I	I	–	Replace if necessary
Brake fluid	I & T	I & T	I & T	I & T	I & T	I & T	–	Replace every 21000 km
WSS / toner ring	I & C	I & C	I & C	I & C	I & C	I & C	–	Replace if damage
WSS cable clamps - (front)	I	I	I	I	I	I	–	Fix new clamp, if missing

[2] Inspect for smooth steering rotation, steering shake / noise. Adjust the steering if necessary.

[3] Inspect for smooth and proper function of front and rear suspension. Also inspect for any visual damage and oil leakage.

[4] Recharge if necessary

[#] Applicable for rear drum brake model.

** Clean the chain with dry cloth and apply TRU SPRAY / TRU4 oil as frequently as every 500 km for better chain life & smooth vehicle running.

Item Service km Period from the date of sale	Service 1st 500-750 1 month	2nd 2500-3000 3 months	3rd 5000-6000 6 months	4th 8500-9000 9 months	5th 11500-12000 12 months	Every 3000 km	Every 6000 km	Remarks
FWSS cable	I	I	I	I	I	I	–	Replace if damage
Brake hose / bundy tubes	I	I	I	I	I	I	–	Replace every 30000 km
Bundy tube mounting (all joints)	I & TI	I & TI	I & TI	I & TI	I & TI	I & TI	–	Inspect for leak
HECU mounting cushions	–	–	I	–	I	–	I	Replace every 30000 km
Toner rings teeth damage	I	I	I	I	I	I	–	Replace if necessary
Master cylinder cups	–	–	–	–	–	–	–	Replace every 21000 km
Wheel freeness	I	I	I	I	I	I	–	
Tyre pressure at cold condition	I & S	I & S	I & S	I & S	I & S	I & S	–	
Engine idling RPM	I & S	I & S	I & S	I & S	I & S	I & S	–	
Idling CO%[5]	I & S	–	–	–	–	–	–	I & S every 12000 km
Evaporative emission control system	I	I	I	I	I	I	–	Check for intactness of ' hoses and canister
Ball joint gear shift lever	–	–	L	–	L	–	L	Lubricate using grease
Centre / side stand pivot	L	L	L	L	L	L	–	Lubricate using TRU4 oil
Swing arm bearings	–	–	–	–	–	–	–	C & L with fresh Bechem premium grade 3 grease every two years
Wheel balancing[6]	–	–	–	–	I	–	–	

R - Replace; I - Inspect; T - Top up; C - Clean; A - Adjust; L - Lubricate; TI - Tighten; S - Set

[5] Idling CO% should be set with the help of exhaust gas analyser and tachometer only.

[6] It is advisable to balance the wheels every 1 year or 12000km and also after every tyre puncture or tyre replacement to have better high speed performance.

RECOMMENDED LUBRICANTS

Application	Qty	Manufacturer	Brand
Engine cum transmission oil	1200 ml (after draining) 1400 ml (after disassembly)	TVS Motor Company	TVS TRU4 FULLY SYNTHETIC oil (SAE 10W30 API-SL, JASO MA2)
Front fork oil	242 ± 2.5 CC	-	TRU Fork oil
Disk brake fluid	–	TVS Girling	DOT 3 / DOT 4
Grease	–	Bechem	Bechem premium grade 3
Chain lubricant	–	TVS Motor Company	TRU SPRAY
Fuel additives	As recommended	IFTEX	

SELF - MAINTENANCE PROCEDURES

BATTERY

To ensure better performance and long life of battery, you are requested to follow the steps given below:

1. Remove the cover frame R (refer page no. 54).
2. Check the battery voltage. If the voltage measured is less than 12.4V, charge the battery using TVS Motor Company Limited recommended battery charger only at TVS Motor Company Authorised Distributor or Dealer / Authorised Service Center.

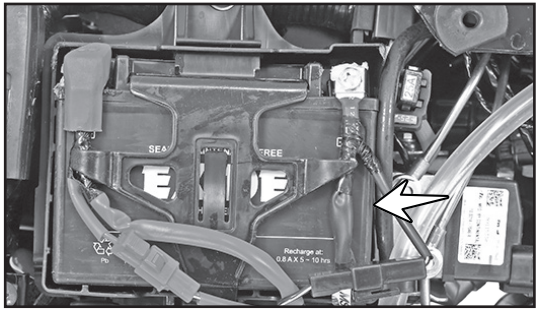

3. Apply petroleum jelly to the terminals to protect it from corrosion.
4. Do not add additional electrical accessories

Caution

Never check the battery charge by shorting the terminals. Always connect the positive terminal first (red wire) and then negative (black wire) to avoid sparking.

The inversion of the battery wires can damage the battery and the recharging system.

If the motorcycle is to remain unused for a long time (a month or longer), it is advisable to disconnect the battery cables or have the battery removed by skilled personnel.

FUSE REPLACEMENT

Non-working of electrical systems may be due to safety fuse failure. Short circuit or overload in the electrical system are the main causes for fuse failure.

To access the fuses located below the seat.

Follow the procedure given below for inspecting and replacing the fuse.

1. Turn 'OFF' the Ignition.
2. Remove the seat as explained in page no. 52 to access the fuse case and remove the fuse case.
3. The fuse case contains one 10A and two 15A fuses.

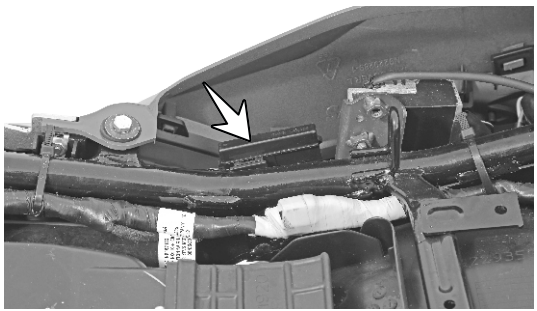

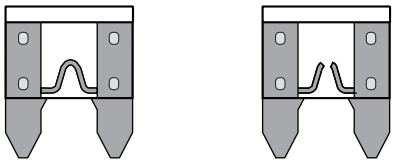

4. Open the fuse case and pull out the blown fuse.
5. Replace the blown fuse with a new (extra fuse is provided inside the fuse case itself).
6. Close and refit the fuse case back to its position.
7. Turn 'ON' the ignition lock and check for proper functioning of the electrical systems. Incase the fuse fails again, consult the nearest TVS Motor Company Authorised Distributor or Dealer / Authorised Service Center.

Caution

*Do not use vehicle by **shorting the wires without a fuse.** This may result in overheating of electrical / wiring and may result in fire. Never replace a fuse with a rating other than that prescribed, in order to avoid damage to the electrical equipment.*

SPARK PLUG

1. Wipe and clean the dust and mud around the spark plug mounting to avoid their entry inside the cylinder.
2. Pullout the suppressor cap from spark plug. Remove the spark plug using a plug spanner.

A spark plug with heavy carbon deposits will not produce strong sparks. Hence, only if necessary, remove the carbon deposits from the spark plug with a small wire brush or spark plug cleaning tool.

Inspect the spark plug electrodes (A) and (B) for any corrosion. If found any, replace the spark plug with a new one.

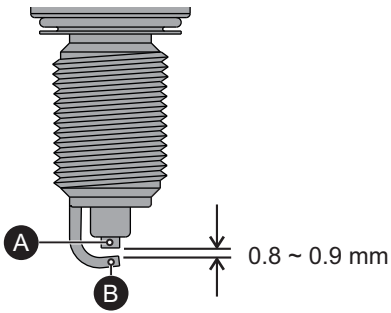

Visually inspect the spark plug gap. The gap should be 0.8 to 0.9 mm. If the gap is found to be more than the limit replace the spark plug with a new one.

After cleaning and inspecting the gap, reinstall the spark plug and tighten by hand to avoid cross threading. Finally tighten using the spanner. Do not over tight or cross thread the spark plug.

Caution

Always use only recommended make and type of spark plug. ***Replace spark plug every 12000 km or 1 year whichever is earlier.***

Cover the spark plug hole with a cloth when the plug is removed to prevent entry of dust / water.

It is advisable to tighten the new spark plug by hand till the end, using plug spanner tighten by 1/4 turn. Then loosen the plug by 1/8 turn and re-tighten using plug spanner.

Care should be taken not to damage the spark plug cooling duct (ram air duct) during dismantling / assembling the spark plug.

ENGINE CUM TRANSMISSION OIL

Check the engine cum transmission oil level periodically. A gauge for checking the oil level is provided at the right-hand side crankcase cover.

1. The check must be performed when engine is in cold condition, after placing the motorcycle in center stand with front wheel touching the ground.
2. Place the motorcycle in an upright position on a horizontal and firm surface.
3. Wipe-off the surroundings of gauge oil level.
4. Remove gauge oil level and wipe it clean.
5. Reassemble the gauge oil level and completely screw it in.
6. Once again remove the gauge and check the oil level.
7. The oil level should be between the minimum and maximum level marks on the gauge as shown in the figure.
8. If the oil level is below the minimum level, top up with TVS TRU4 FULLY SYNTHETIC oil (SAE 10W 30 API-SL, JASO MA2) upto the maximum level mark. Do not overfill.
9. Wipe out the oil traces with a clean cloth to prevent dust accumulation and re-fix the gauge.

Caution

Do not run the vehicle with insufficient / without engine cum transmission oil as it will cause serious damage to the engine components.

Excessive oil filling will cause oil leak and other malfunctions. Always use TVS TRU4 FULLY SYNTHETIC oil only (SAE 10W 30 API-SL, JASO MA2).

Make sure that no foreign object gets in the crankcase while topping up the engine oil.

Warning

Correctly recycle or dispose the used engine oil in order to avoid environmental pollution.

CLUTCH ADJUSTMENT

Clutch lever free play is one of the most important adjustment which you may need to check in-between services for better life of the clutch plates.

The free play of the clutch lever should be 8 to 15 mm as measured at the clutch lever end at handle bar.

Adjust the clutch lever free play periodically by means of clutch cable adjuster at arm clutch release. If the free play is not within the specified limit,

1. Ensure that the engine is cold (engine oil at room temperature).

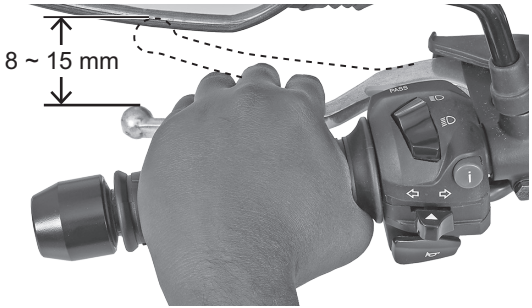

2. Loosen the lock nut (2) while holding the clutch cable adjusting nut (1).
3. Adjust the clutch cable adjusting nut (1) 'in' or 'out' to give sufficient play in the clutch lever.
4. After adjusting the play, hold the adjuster nut in the same position, tighten the lock nut.

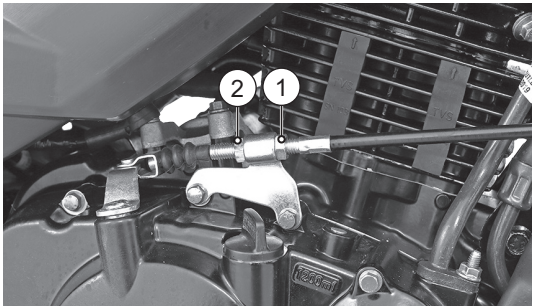

Caution

Too much or too less clutch lever free play will damage the clutch plates, thereby affecting the performance of the vehicle.

Adjust the clutch lever free play only when the engine is cold.

Caution

After adjusting free play properly, if there is a clutch slip or difficulty in shifting gear, visit your TVS Motor Company Authorised Distributor or Dealer / Authorised Service Center for rectification.

REAR SHOCK ABSORBER

TVS RTR 160 4V is provided with dual rated, 7 step adjustable, gas filled rear shock absorber to meet different road and load.

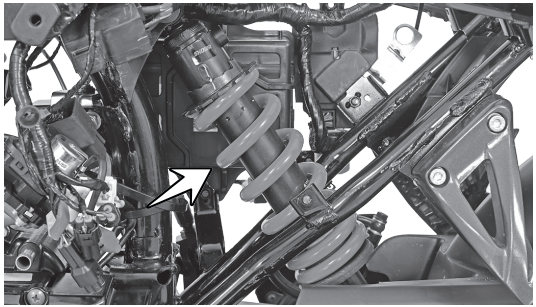

Warning

The rear shock absorber contains highly compressed gas. Do not try to open or disassemble it in any way.

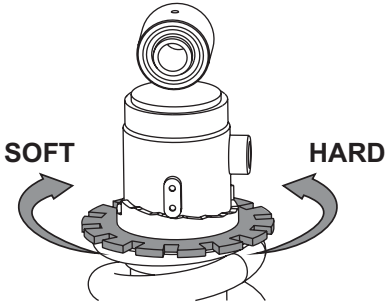

Caution

Adjust step by step. Do not go at a stretch as it will damage the cam.

Note

During the time of delivery of the motorcycle, the rear suspension is adjusted to the standard configuration.

Rear shock absorber spring stiffness can be set to your convenience. Contact your TVS Motor Company Authorised Distributor or Dealer / Authorised Service Center for setting the rear shock absorber load.

BRAKES

Front brake

You can observe a master cylinder (1) on the right side of the handle bar, a caliper assembly (2), a disc (3) and a toner ring along with a cover (4) fitted on the front wheel.

Also you can observe a high pressure hose connecting the master cylinder to the caliper assembly.

1. Check the master cylinder brake fluid level through the view piece glass (A).

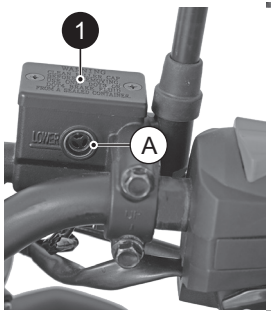

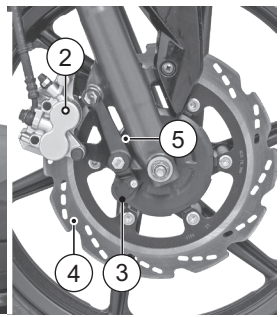

2. Brake fluid level always should be above the 'LOWER' mark (B) on the master cylinder when the master cylinder is parallel to the ground.
3. If the brake fluid level is below the mark or while applying brake if you feel the brake is more spongy or ineffective due to air entry, contact TVS Motor Company Authorised Distributor or Dealer / Authorised Service Center for topping-up the brake fluid, air bleeding and other brake related inspections.

Note

Check the brake fluid level only when the master cylinder is parallel to the ground.

Rear brake (disc brake model)

You can observe a master cylinder (1) mounted on the right side rider foot rest, a reservoir (2) below the cover frame R, a caliper assembly (3) fitted on the rear wheel axle below the wheel hugger rear, a disc (4) to the rear wheel and a high pressure hose (5) connecting the master cylinder and the caliper.

1. Remove the cover frame R (refer page no. 54 for removal procedure).
2. Check the brake fluid level in the reservoir. It should be between maximum and minimum level.

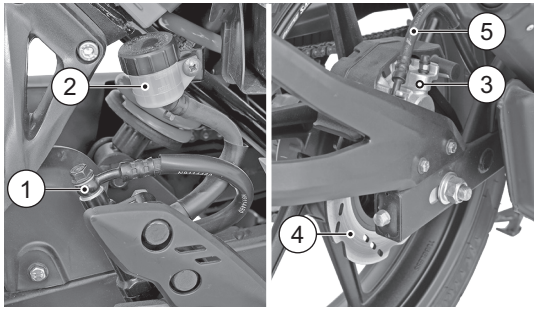

3. If the brake fluid level is below minimum or while applying brake if you feel the brake is more spongy or ineffective due to air entry, contact TVS Motor Company Authorised Distributor or Dealer / Authorised Service Center for topping-up the brake fluid, air bleeding and other brake related inspections.

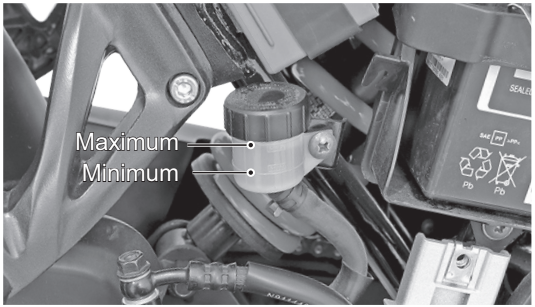

Note

Check the brake fluid level only when the master cylinder is parallel to the ground.

Brake pad wear indicator

Visually check the brake pads for wear. If the wear is found beyond the wear indicator groove as shown in the figure then, replace the brake pads as a set with a new one.

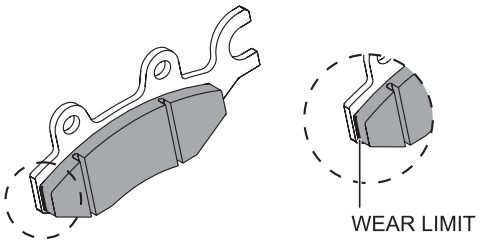

Warning

Lack of maintenance of the brake system increases the risk of accident. If you notice any malfunction in brake system contact nearest TVS Motor Company Authorised Distributor or Dealer / Authorised Service Center.

Caution

Replace the brake pads as a set, if the wear indicator shows beyond the wear limit.

Rear brake (drum brake model)

1. Measure the free play of the rear brake pedal at the pedal end as shown in the figure.
2. The free play of the brake pedal before the engagement of brake should be between 15 ~ 20 mm.

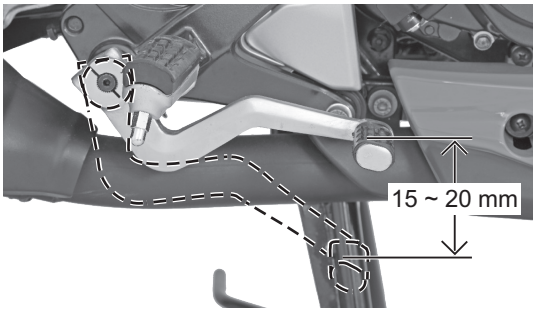

Warning

Check the brake pedal play periodically. However the brake play needs to be adjusted more frequently depending upon the usage.

3. If the measured free play is more than the limit, adjust the nut provided at the rear wheel end to obtain the correct play.
4. Turn the adjuster nut clockwise to reduce the free play or turn it in anti-clockwise direction to increase the free play.

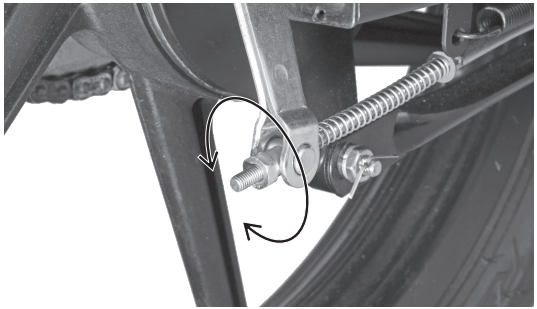

Brake shoe wear indicator

When the brake is applied, the wear index mark (A) on the cam brake should be within the range of wear limit indicator (B) on the rear brake panel assembly.

In case of the mark going beyond the wear limit, index the lever to next slot with the help of Dealer to extend shoe life.

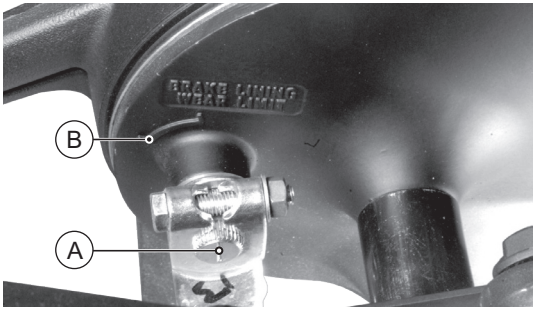

Caution

Replace the brake shoes as a set. if the wear limit indicator shows beyond the wear limit even after indexing the lever.

TYRES

Tyre pressure:

Check the tyre pressure atleast once in a week if not more frequently. Insufficient air pressure in the tyres not only hasten tyre wear, but also seriously affects the stability of the vehicle.

Under-inflated tyres make smooth cornering difficult and over-inflated tyres decreases the tyre contact with the ground which can lead to skidding and loss of control. Be sure that the tyre pressure is within the specified limits at all times.

	Solo	Pillion
Front	1.75 kg/cm² (25 PSI)	1.75 kg/cm² (25 PSI)
Rear	2.00 kg/cm² (28 PSI)	2.25 kg/cm² (32 PSI)

Warning

The tyre inflation pressure in cold condition and the tyre thread condition are extremely important for the performance and safety of the rider. Check the tyres frequently for inflation pressure as well as the wear pattern on it. Use of a tyre other than the standard will cause instability.

Tyre tread condition

Operating the vehicle with excessively worn tyres will decrease riding stability and can lead to loss of control.

It is recommended to replace the tyre when the tyre wears off to the tyre wear indicator level (indicated by TWI on the tyre).

Tyre rotation direction

While reassembling the tyre, after removing from wheel rim, ensure that the arrow mark (A) provided on the tyre, faces the direction of wheel rotation.

Tyre puncture

TVS RTR 160 4V is fitted with a tubeless tyre on both front and rear wheel. Incase of any puncture / tyre damage it is advised to visit nearest tyre manufacturer Dealer or the tyre repair shops who know the repairing methods of tubeless tyre.

It is not necessary to remove the tyre from wheel rim always to attend the puncture. Eventhough, if there is a need of tyre removal, it is strongly recommended to use a tyre removal / fitment machine. If at all, tyre levers need to be used, the levers should be free from sharp edges and care should be taken not to damage the rim and tyre.

Caution

Side walls of the tubeless tyres which are in contact with the wheel rim are only seals the air inside the wheel assembly. Hence, care should be taken not to damage the side walls of the tyres during removal / reassembly.

Wheel balancing to be done every 1 year or every 12000 km. In addition, after every tyre puncture repair or tyre replacement, wheel balancing to be done.

DRIVE CHAIN

Proper lubrication and adjustment of drive chain gives long service life of the chain. Poor maintenance of the chain causes premature wear or damage to the drive chain and sprockets. The drive chain must be cleaned, checked, lubricated and adjusted at specified intervals mentioned in the maintenance schedule.

Even though the chain is cleaned, lubricated and adjusted during regular service by the Dealers, the user must clean the chain with a dry cloth and apply TRU SPRAY / TRU4 oil as frequently as every 500 km for better chain life and smooth vehicle running.

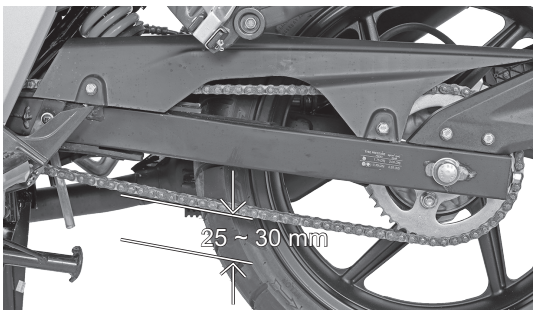

Check, clean, lubricate and adjust the drive chain in the following manner:

1. Place the vehicle on centre stand with the transmission in neutral.
2. Inspect the drive chain slackness (vertical movement) using the finger as shown in the figure.
3. The slackness of the drive chain should not exceed the limit (25 ~ 30 mm).
4. If the slackness is found more contact TVS Motor Company Authorised Distributor or Dealer / Authorised Service Center for adjustment.
5. If the slackness is found within the limit, clean the chain with a dry cloth and lubricate using TRU SPRAY / TRU4 oil.

Caution

Lubricate the drive chain after the motorcycle is washed with water or riding in rainy / wet condition.

The chain must be serviced more frequently when the vehicle is operated under severe conditions like dusty, muddy, wet, high speed or frequent starting / stopping.

Warning

Riding with improperly adjusted chain / high slackness can cause the chain to come off the sprockets resulting in accident or serious damage to the motorcycle.

Misalignment of rear wheel or sprockets can cause abnormal wear of chain and sprockets and results in unsafe riding condition.

FRONT WHEEL REMOVAL AND REASSEMBLY

1. Remove the axle nut (1) along with a washer.
2. Pull out the axle (2) along with a washer and remove spacer from both the sides of the wheel.
3. Place a support below the frame to prevent vehicle from falling and lift the vehicle up.
4. Carefully dislocate the disc from the caliper assembly and slide the wheel out.
5. Reverse the procedure for reassembling.

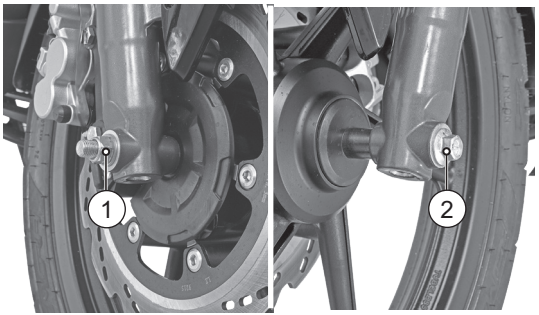

Warning

Ensure proper seating of disc in the caliper assembly while reassembling the wheel.

Ensure to re-fix the right spacers at both the sides of the wheel.

Keep the toner ring upwards whenever the wheel is removed in order to avoid damages to the toner ring.

REAR WHEEL REMOVAL AND REASSEMBLY - Disc brake type

1. Remove the wheel hugger rear.
2. Remove the axle nut (1) and along with the washer and partially pull out the axle (2).
3. Take out the caliper assembly by dislocating it from the disc and the swing arm lug.
4. Carefully hang the caliper assembly in the swing arm itself. Take out the spacer and pull out the axle fully.
5. Remove the wheel assembly by gently tapping it along with the disc.
6. During re-assembly, engage the drum sprocket with the wheel along with the drive chain and then assemble the wheel into swing arm.

7. Re-assemble the other parts in the reverse order of removal.

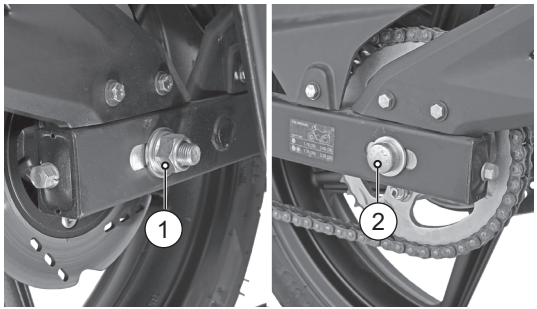

Caution

While assembling the caliper assembly ensure that the slot provided in the caliper is properly located to the lug provided in the swing arm assembly.

Always make sure that whenever the wheel is removed, axle nut is properly re-tightened to the specified torque and chain play is re checked and adjusted if required.

Note

During removal of rear wheel axle hold the drum sprocket assembly with the hand as it may fall. Carefully hang the drum sprocket along with chain in the swing arm itself.

REAR WHEEL REMOVAL AND REASSEMBLY - Drum brake type

1. Remove the wheel hugger rear.
2. Remove the rear brake adjuster nut (1) and disconnect the brake rod.
3. Remove the split pin (2) and the nut (3) from the torque link mounting with the brake panel and disconnect the torque link.
4. Remove the axle nut (4). Pull out the axle (5) and take out the spacer bush from the rear wheel assembly.
5. Tilt the vehicle to the left and take out the wheel assembly along with brake panel. Separate the brake panel from the wheel.
6. For locating and reassembling the rear wheel easily, engage the gear. This will arrest the free movement of the drum sprocket. Reverse the procedure for reassembly.

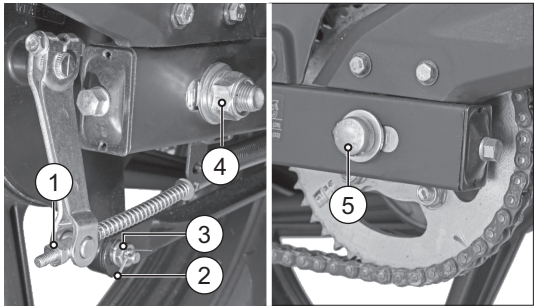

Caution

Once the split pins are removed, replace them with new ones.

STORAGE PROCEDURES

For storage of your motorcycle for longer periods of over a month and above, we recommend to carry out the following steps:

1. Clean the vehicle thoroughly. Park the vehicle on centre stand.
2. Warm up the engine and drain engine cum transmission oil. Store the oil, if new, in a dust free container.
3. Empty the fuel tank. Turn the fuel cock lever to 'OFF' position.
4. Drain the petrol from the carburettor.
5. Remove the spark plug and feed in several drop of engine cum transmission oil through spark plug hole. Crank the engine few times and reinstall the spark plug.

Caution

Do not park the vehicle on a slope or soft ground or else it may fall.

During storage, the battery must be recharged on a constant current battery charger at recommended amperage atleast once in a month.

6. Remove the battery, store it away from direct sunlight and freezing temperatures.
7. Place a suitable support at the bottom of the frame so that both the tyres are off the ground. This will ensure better tyre life.
8. Cover up the vehicle completely with a clean tarpaulin or any other suitable cover. Store the vehicle inside a garage or similar area to avoid damage due to dust and rain. Make sure that the storage area is well ventilated and free from any source of flame or spark.

TAKING THE VEHICLE OUT OF STORAGE FOR REGULAR USE

1. Take the vehicle out of the garage and clean it thoroughly.
2. Remount the battery after bench charging if required.
3. Fill the engine cum transmission oil (TVS TRU4 FULLY SYNTHETIC - SAE 10W30 API-SL, JASO MA2) and check the oil level using the gauge.
4. Lubricate the parts as instructed in the maintenance schedule.
5. Fill up fresh petrol in the fuel tank.
6. Check and inflate the tyres to the specified tyre pressure.
7. Check and correct the points mentioned in page no. 55.

Caution

Avoid using alkaline solution like detergent soaps for washing. This may damage head lamp and other lamp assemblies.

Turn the ignition switch to 'ON' position. Start the engine with choke 'ON' for a few minutes and ride out.

RECOMMENDED TIPS WHEN TAKING A LONG TRIP OF MORE THAN 500 KM

A) Please keep the following items for use in case of emergency:
   1. Complete tool kit / first aid kit
   2. Recommended spark plug one number.
   3. Turn signal lamp bulbs one number each.
   4. Throttle and clutch cables one number each.

B) Precautions to be taken for the journey:

1. Ensure engine cum transmission oil and brake oil are up to the level.
2. Adequate fuel in fuel tank.

C) Check your motorcycle for the following:

1. Tightness of all bolts and nuts with correct torque value.
2. Fitness of tyres / tyre pressure / tread depth.
3. All bulbs, indicators and horn function.
4. Balancing of wheel.
5. Smooth functioning of all cables and their free plays.
6. Smoothness of steering operation.
7. Slackness and lubrication of chain (page no. 7)
8. Front / rear brake functioning and rear brake lamp switch adjustment.
9. Front fork for any abnormality.
10. Fuel cock sediment cup filter cleanliness.
11. Spark plug cleanliness and condition of spark plug.
12. Air filter element cleanliness.
13. Correct idling speed.
14. Lubrication of all items mentioned in the periodic maintenance schedule.
15. Intactness of EVAP system hoses and canister.
16. Any other job as necessary.
17. Have your vehicle checked at any TVS Motor Company Authorised Distributor or Dealer / Authorised Service Center.

Caution

It is recommended to take any long journey after 1000 kms of running in period completion.

SCHEDULED SERVICE RECORD

Sl.No.	Description (kms or month whichever of the two occurs early from the date of purchase)	Odometer reading	Job card no. / Date	Servicing Dealer's stamp and sign.
1	**1st service** between (a) **500 - 750 km** or (b) **1 month**			
2	**2nd service** between (a) **2500 - 3000 km** or (b) **3 months**			
3	**3rd service** between (a) **5000 - 6000 km** or (b) **6 months**			
4	**4th service** between (a) **8500 - 9000 km** or (b) **9 months**			
5	**5th service** between (a) **11500 - 12000 km** or (b) **12 months**			
6	**6th service** between (a) **14500 - 15000 km** or (b) **15 months**			
7	**7th service** between (a) **17500 - 18000 km** or (b) **18 months**			

SCHEDULED SERVICE RECORD

Sl.No.	Description (kms or month whichever of the two occurs early from the date of purchase)	Odometer reading	Job card no. / Date	Servicing Dealer's stamp and sign.
8	**8th service** between (a) **20500 - 21000 km** or (b) **21 months**			
9	**9th service** between (a) **23500 - 24000 km** or (b) **24 months**			
10	**10th service** between (a) **26500 - 27000 km** or (b) **27 months**			
11	**11th service** between (a) **29500 - 30000 km** or (b) **30 months**			
12	**12th service** between (a) **32500 - 33000 km** or (b) **33 months**			
13	**13th service** between (a) **35500 - 36000 km** or (b) **36 months**			
14	**14th service** between (a) **38500 - 39000 km** or (b) **39 months**			

SCHEDULED SERVICE RECORD

Sl.No.	Description (kms or month whichever of the two occurs early from the date of purchase)	Odometer reading	Job card no. / Date	Servicing Dealer's stamp and sign.
15	**15th service** between (a) **41500 - 42000 km** or (b) **42 months**			
15	**16th service** between (a) **44500 - 45000 km** or (b) **45 months**			
17	**17th service** between (a) **47500 - 48000 km** or (b) **48months**			
18	**18th service** between (a) **50500 - 51000 km** or (b) **51 months**			
19	**19th service** between (a) **53500 - 54000 km** or (b) **54 months**			
20	**20th service** between (a) **56500 - 57000 km** or (b) **57months**			
21	**21st service** between (a) **59500 - 60000 km** or (b) **60 months**			

MANUFACTURER : TVS MOTOR COMPANY LIMITED
P.B. No1, Bythahalli, Kadakola post, Mysuru - 571 311, India.

ENGINE

Type	:	4 stroke, Oil cooled, single cylinder OHC
Cylinder bore	:	62 mm
Stroke	:	52.9 mm
Piston displacement	:	159.7 cc
Compression ratio	:	10.15: 1
Carburettor	:	UCAL CV
Air filter	:	Viscous Paper filter
Oil filter	:	Wire mesh and micronic paper filter
Lubrication system	:	Forced wet sump
Maximum power in kW	:	12.14 (16.5 PS) @ 8000 rpm
Maximum torque in Nm	:	14.8 @ 6500 rpm
Maximum speed	:	113 km / h
Engine idling rpm*	:	1500 ± 100 rpm
Starting system	:	Electric starter / kick starter
Emission norms	:	Euro 3

TRANSMISSION

Clutch	:	Wet - multiplate type
Gear shift pattern	:	1 down and 4 up
Primary transmission	:	Helical gears
Secondary transmission	:	Chain and sprockets

GEAR RATIOS

I gear	:	2.917
II gear	:	1.857
III gear	:	1.333
IV gear	:	1.050
V gear	:	0.880
Primary reduction	:	3.095
Final reduction	:	3.461

* Under warm condition

CHASSIS

Overall length	:	2050 mm
Overall width	:	790 mm
Overall height	:	1050 mm
Seat height	:	800 mm
Ground clearance	:	180 mm
Wheel base	:	1357 mm
Kerb weight (with toolkit	:	143 kg (Drum brake version)
and 90% of fuel)	:	145 kg (Disc brake version)
Pay load	:	130 kg
Maximum laden weight	:	273 kg (Drum brake version)
	:	275 kg (Disc brake version)
Steering angle	:	35° (both sides)
Caster angle	:	26°
Frame	:	Double Cradle Split Synchro STIFF (DCSSS)
Front suspension	:	Telescopic oil damped
Rear suspension	:	Gas charged Mono shock absorber, 7 step adjustable with rectangular swing arm
Trail length	:	95.8 mm

TYRE

Tyre size

Front	:	90/90-17 Tubeless
Rear	:	110/80-17 Tubeless (Drum version)
	:	130/70-17 Tubeless (Disc version)

Tyre pressure

Front	:	1.75 kg/cm² (25 PSI)
Rear - solo	:	2.00 kg/cm² (28 PSI)
Rear - dual	:	2.25 kg/cm² (32 PSI)

BRAKES

Front	:	Hand operated, 270 mm petal disc
Rear	:	Foot operated, 200 mm petal disc
	:	Foot operated, 130 mm drum

ELECTRICAL

Type	:	AC generator
Ignition system	:	IDI - Engine load based digital ignition
Spark plug	:	BOSCH - UR4KE
Battery type	:	12V, 6 Ah
Generator	:	Fly wheel magneto 12V, 180W
Head lamp	:	12V, LED Headlamp
Position lamp	:	LED lamp (12V, 3W x 2)

ELECTRICAL

Tail / brake lamp	:	LED indicators (1W max. / 2.5W max.)
Turn signal lamp	:	12V, 10W x 4
Number plate lamp	:	12V, 5W x 1
Instrument panel	:	LCD / LED indicators
Horn	:	12V, DC x 2
Fuse	:	12V, 15A x 2, 12V, 10A x 1

CAPACITIES

Fuel tank capacity	:	12 litres (including reserve)**
Reserve	:	2.5 litres
Fuel	:	**Unleaded Petrol**
Engine cum transmission oil grade	:	TVS TRU4 FULLY SYNTHETIC oil (SAE 10W30 API-SL, JASO MA2)
Engine cum transmission oil and capacity	:	1200 ml (after draining) 1400ml (after disassembly)
Front fork oil grade	:	TRU FORK oil
Front fork oil capacity	:	242 ± 2.5 cc
Brake fluid	:	TVS Griling DOT 3 / DOT 4

** The fuel tank is not a measuring instrument and the capacity of fuel tank may slightly vary from the indicated capacity.

Caution

Using the bulb other than the specified rating can result in overloading of the electrical system or premature failure of the bulb.

Note

Specifications are subject to change without notice.